FB-N210

パーツブック
PARTS BOOK

超高速２本縫オーバーロックミシン
HIGH SPEED TWIN NEEDLE OVERLOCK SEWING MACHINE

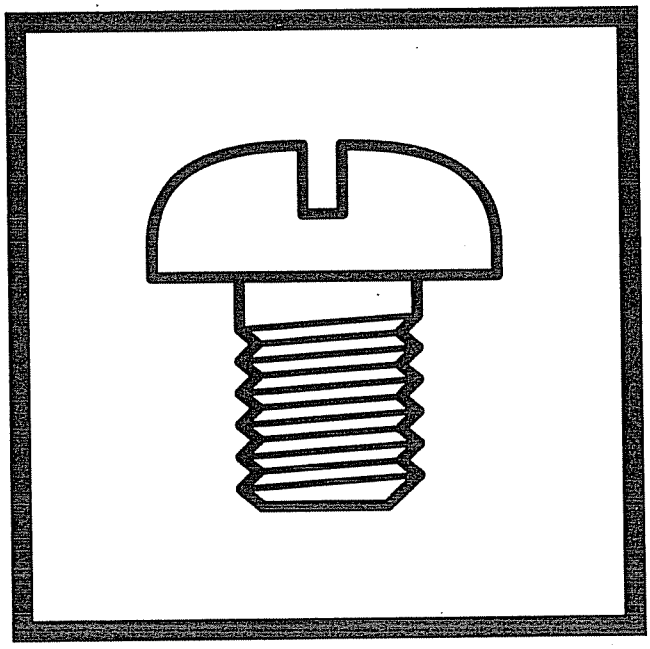

brother®

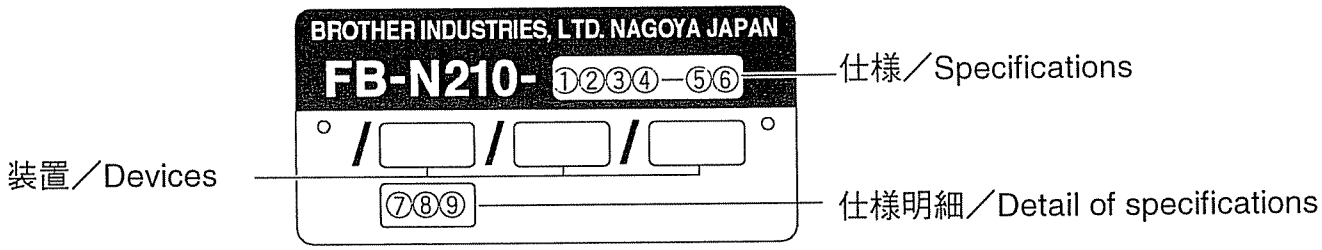

①

	縫い目形式 / Stitch form
W	2本針縁かがり・2本掛け Twin needle over-edge chain stitch, standard stitch
M	2本針縁かがり・1本外し Twin needle over-edge chain stitch, mock safety stitch

②

	用途 / Applications
0	地縫い / Plain seaming
4	ひだ取り / Ruffling
5	テープ付け / Taping
6	パイピング付ひだ取り / Ruffling with piping
8	バックタック / Back tacking

③

	縫製物 / Sewing materials
1	極薄物～薄物 / Extra light – light materials
2	薄物～中厚物 / Light – medium materials
3	中厚物～厚物 / Medium – heavy materials
4	厚物～極厚物 / Heavy –Extra heavy materials
5	極厚物 / Extra heavy materials
6	バルキーニット / Bulky knit
7	極厚バルキーニット / Extra heavy bulky knit

④

	特殊用途 / Special use
0	標準 / Standard
1	小回り仕様 / Small type
S	セミオートバックタック / Semi auto backtack

⑤

	針幅 / Needle gauge
2	2.2mm
X	2.5mm
3	3mm

⑥

	かがり幅 / Stich width
2	2 mm
3	3 mm
4	4 mm
5	5 mm
6	6 mm
7	7 mm

⑦

	上ルーパリフト / Over-looper locus
S	スタンダード / Standard lift
H	ハイリフト / High lift
E	超ハイリフト / Extra high lift

⑧

	差動送り歯／針板チェンランド / Differential feed dog
2	2列標準／チェンランドあり 2-row standard / with chain land
3	3列標準／チェンランドあり 3-row standard / with chain land
4	4列標準／チェンランドあり 4-row standard / with chain land
7	2列標準／チェンランドなし 2-row standard / without chain land
8	3列標準／チェンランドなし 3-row standard / without chain land
9	4列標準／チェンランドなし 4-row standard / without chain land

⑨

	上メス形状 / Upper knife shape
F	平メス / Flat knife
A	角メス / Angle knife
B	角メス幅広 / Angle knife, wide
V	角メス波刃 / Angle knife, wave shape
W	角メス幅広波刃 / Angle knife, wave shape

パーツブックご利用に際して

1．この本は、2001年12月のデータに基づいて作成されたものです。
2．部品は予告なしに設計変更される場合があります。
3．組単位で補給する部品は、 破線で示してあります。
4．部品コード欄が＊となっている場合は、ゲージ部品一覧表（４３～４７ページ）でお調べ下さい。

目　次

A．フレーム関係．．．

Notes for using this parts book

1. This book was prepared based on information available in December 2001.
2. Parts are subject to changes in design without prior notice.
3. Parts supplied as complete assemblies are circled by a dotted line [ ].
4. If the symbol * is found in the " Parts No." column, refer to the gauge parts list on page 43～47.

CONTENTS

A. Machine body. 1
B. Crankshaft mechanism. 5
C. Needle bar mechanism. 7
D. Needle cooler. 9
E. Serging attachment. 9
F 1. Presser foot mechanism. 11
F 2. Presser foot mechanism 13
G. Feed mechanism. 17
H. Knife mechanism. 21
J. Back-tacking. 23
K. Over looper mechanism. 25
L. Under looper mechanism. 27
M. Lubrication. 29
N. Thread tension. 31
P 1. Ruffling attachment. 33
P 2. Ruffling attachment. 35
P 3. Ruffling attachment. 37
Z 1. Accessories. 39
Z 2. Accessories (Option parts). 41
Ga1. Gauge parts List. 43
Ga2. Gauge parts List. 44
Ga3. Gauge parts List. 45
Ga4. Gauge parts List. 46
Ga5. Gauge parts List. 47
Wa. Warning labels

A . フレーム関係 / Machine body

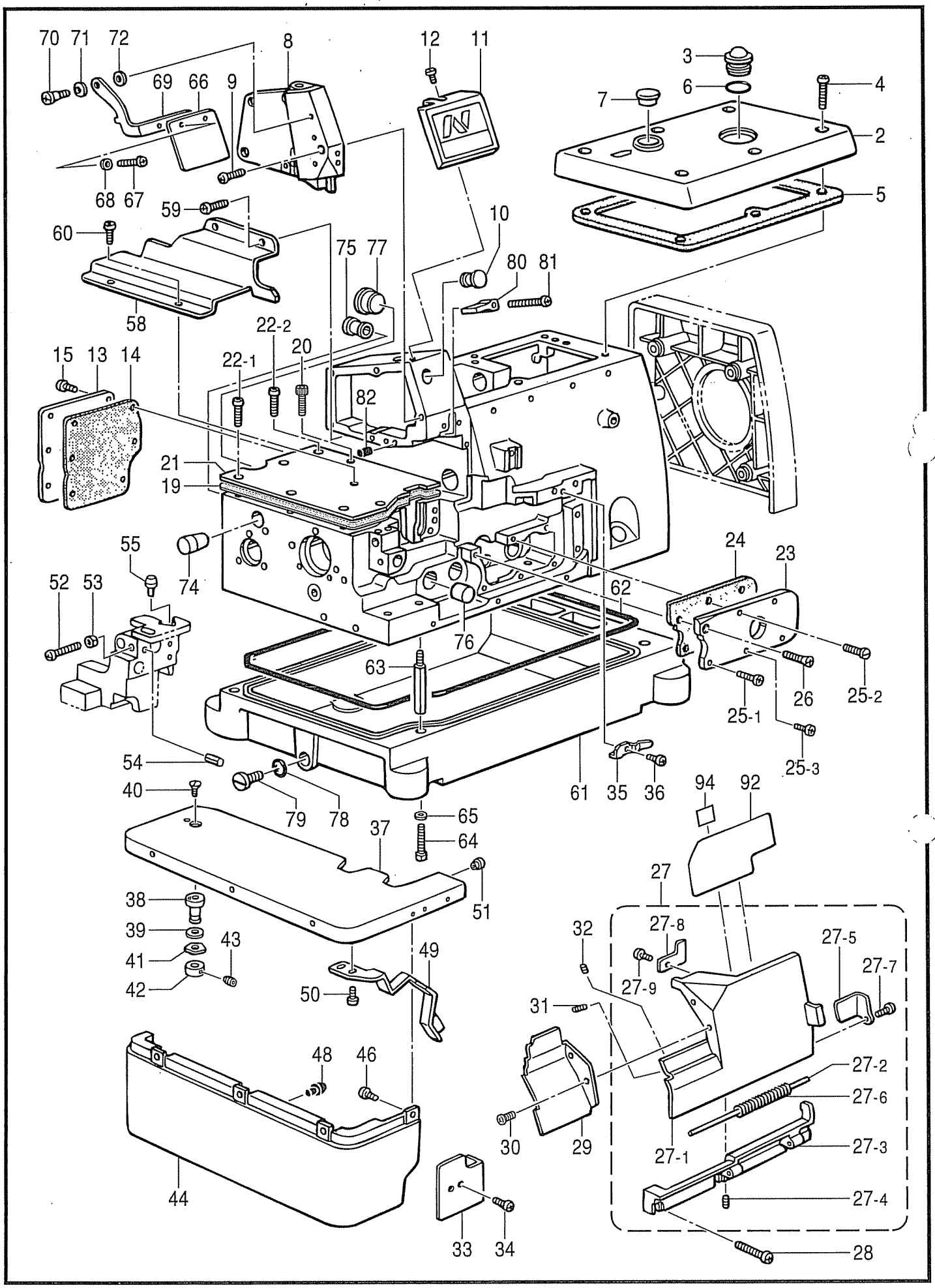

878-N21-052

A．フレーム関係 / Machine body

REF.NO	CODE	Q'TY	ヒンメイ	NAME OF PARTS	RM
2	S39605001	1	ｳﾜｶﾊﾞｰ	TOP COVER	
3	S02606020	1	ﾕﾘﾖｳｹｲﾏﾄﾞ	OIL GAUGE WINDOW	
4	062401012	6	ﾅﾍﾞｺM4X10	SCREW, PAN M4X10	
5	S39606020	1	ﾊﾟｯｷﾝ	PACKING	
6	081014670	1	OﾘﾝｸﾞPW14	O RING, PW14	
7	S23337001	1	ｺﾞﾑｾﾝ18.5	RUBBER CAP, 18.5	
8	S39607001	1	ｿｸﾒﾝｶﾊﾞｰ	SIDE COVER, FRAME	
9	062400812	5	ﾅﾍﾞｺ4X8	SCREW, PAN M4X8	
10	S20345001	1	ｺﾞﾑｾﾝ14	RUBBER CAP, 14	
11	S39608021	1	ﾒﾝｲﾀｶﾊﾞｰ	FACE PLATE COVER	
12	060400612	1	ﾊﾞｲﾝﾄﾞM4X6	SCREW, BIND M4X6	
13	S20310001	1	ｵｸﾘｷｺｳｶﾊﾞｰB	COVER, B ;FEED MECHANISM	
14	S20311000	1	ﾊﾟｯｷﾝ	PACKING	
15	060400812	6	ﾊﾞｲﾝﾄﾞM4X8	SCREW, BIND M4X8	
19	S44778000	1	ｵｸﾘﾀﾞｲｶﾊﾞｰﾊﾟｯｷﾝ	PACKING, FEED BAR	
20	018400832	1	ｱﾅﾎﾞﾙﾄ4X8	BOLT, SOCKET M4X8	
21	S44779001	1	ｵｸﾘﾀﾞｲｶﾊﾞｰ	FEED BAR COVER	
22-1	060400812	5	ﾊﾞｲﾝﾄﾞM4X8	SCREW, BIND M4X8	
22-2	S44535001	1	ﾊﾞｲﾝﾄﾞM4X8ｼｰﾙ	SCREW, BIND M4X8 SEAL	
23	S39564021	1	ｳﾁｶﾊﾞｰ	INSIDE COVER	
24	S44536000	1	ｳﾁｶﾊﾞｰﾊﾟｯｷﾝ	PACKING, INSIDE COVER	
25-1	060401012	3	ﾊﾞｲﾝﾄﾞM4X10	SCREW, BIND M4X10	
25-2	S23616101	1	ｼﾒﾈｼﾞ4X10	SCREW, M4X10	
25-3	S44535001	1	ﾊﾞｲﾝﾄﾞM4X8ｼｰﾙ	SCREW, BIND M4X8 SEAL	
26	061400812	1	ｻﾗｺM4X8	SCREW, FLAT M4X8	
27	S39611001	1	ﾏｴｶﾊﾞｰLｸﾐ	FRONT COVER ASSY, L	
27-1	S39612001	1	ﾏｴｶﾊﾞｰL	FRONT COVER, L	
27-2	S39613001	1	ﾏｴｶﾊﾞｰﾋﾝｼﾞｼﾞｸ	HINGE SHAFT, FRONT COVER	
27-3	S20319001	1	ﾏｴｶﾊﾞｰﾋﾝｼﾞ	HINGE, FRONT COVER	
27-4	012400432	2	ｱﾅﾋﾗ4X4	SET SCREW, SOCKET (FT) M4X4	
27-5	S20320101	1	ﾏｴｶﾊﾞｰｽﾄｯﾊﾟ	STOPPER, FRONT COVER	
27-6	S20321001	1	ﾏｴｶﾊﾞｰﾊﾞﾈ	SPRING, FRONT COVER	
27-7	060400612	1	ﾊﾞｲﾝﾄﾞM4X6	SCREW, BIND M4X6	
27-8	S20327101	1	ﾏｴｶﾊﾞｰﾄﾒｲﾀ	STOPPER PLATE, FRONT COVER	
27-9	060400612	1	ﾊﾞｲﾝﾄﾞM4X6	SCREW, BIND M4X6	
28	060401412	3	ﾊﾞｲﾝﾄﾞM4X14	SCREW, BIND M4X14	
29	S38304001	1	ﾏｴｶﾊﾞｰS	FRONT COVER, S	
30	062400612	2	ﾅﾍﾞｺM4X6	SCREW, PAN M4X6	
31	012400832	1	ｱﾅﾋﾗ4X8	SET SCREW, SOCKET (FT) M4X8	
32	012400432	1	ｱﾅﾋﾗ4X4	SET SCREW, SOCKET (FT) M4X4	
33	S20324101	1	ﾏｴｶﾊﾞｰLｱﾝﾅｲ	GUIDE, L F-VOVER	
34	060400612	2	ﾊﾞｲﾝﾄﾞM4X6	SCREW, BIND M4X6	
35	S20325001	1	ﾏｴｶﾊﾞｰﾄﾒｲﾀﾊﾞﾈ	SPRING, PLATE	
36	060400612	1	ﾊﾞｲﾝﾄﾞM4X6	SCREW, BIND M4X6	
37	S39562001	1	ｸﾛｽﾌﾟﾚｰﾄ	CLOTH PLATE	
38	S39623001	1	ｸﾛｽﾌﾟﾚｰﾄｻｻｴｼﾞｸ	CLOTH PLATE SHAFT	
39	141183000	1	ｸﾛｽﾌﾟﾚｰﾄｼｰﾄ	CLOTH PLATE SHEET	
40	100032003	1	ｻﾗﾈｼﾞ4.37	SCREW, FLAT SM4.37-40X8	
41	100315002	1	ﾅﾐﾊﾞﾈ	WASHER	
42	S39624021	1	ｾｯﾄｶﾗｰ	SET SCREW COLLAR	
43	012060632	2	ｱﾅﾋﾗ6X6	SET SCREW, SOCKET (FT) M6X6	
44	S38301020	1	ｸﾛｽﾌﾟﾚｰﾄｼﾀ	CLOTH PLATE, LOWER	
46	060400612	4	ﾊﾞｲﾝﾄﾞM4X6	SCREW, BIND M4X6	
48	S20412000	2	ｺﾞﾑｾﾝ3.7	RUBBER CAP, 3.7	
49	S39625151	1	ｸﾛｽﾌﾟﾚｰﾄﾄﾒｲﾀﾊﾞﾈ	SPRING, PLATE	
50	060400612	2	ﾊﾞｲﾝﾄﾞM4X6	SCREW, BIND M4X6	
51	156482000	1	ｾﾝ4	CAP, 4	
52	062401212	1	ﾅﾍﾞｺ4X12	SCREW, PAN M4X12	
53	021400212	1	2ｼｭﾅﾂﾄ4	NUT, 2 M4	
54	047602042	1	ｽﾌﾟﾘﾝｸﾞﾋﾟﾝ6X20	PIN, SPRING ROLL 6X10	
55	S20412000	1	ｺﾞﾑｾﾝ3.7	RUBBER CAP, 3.7	

878-N21-052

A．フレーム関係 / Machine body

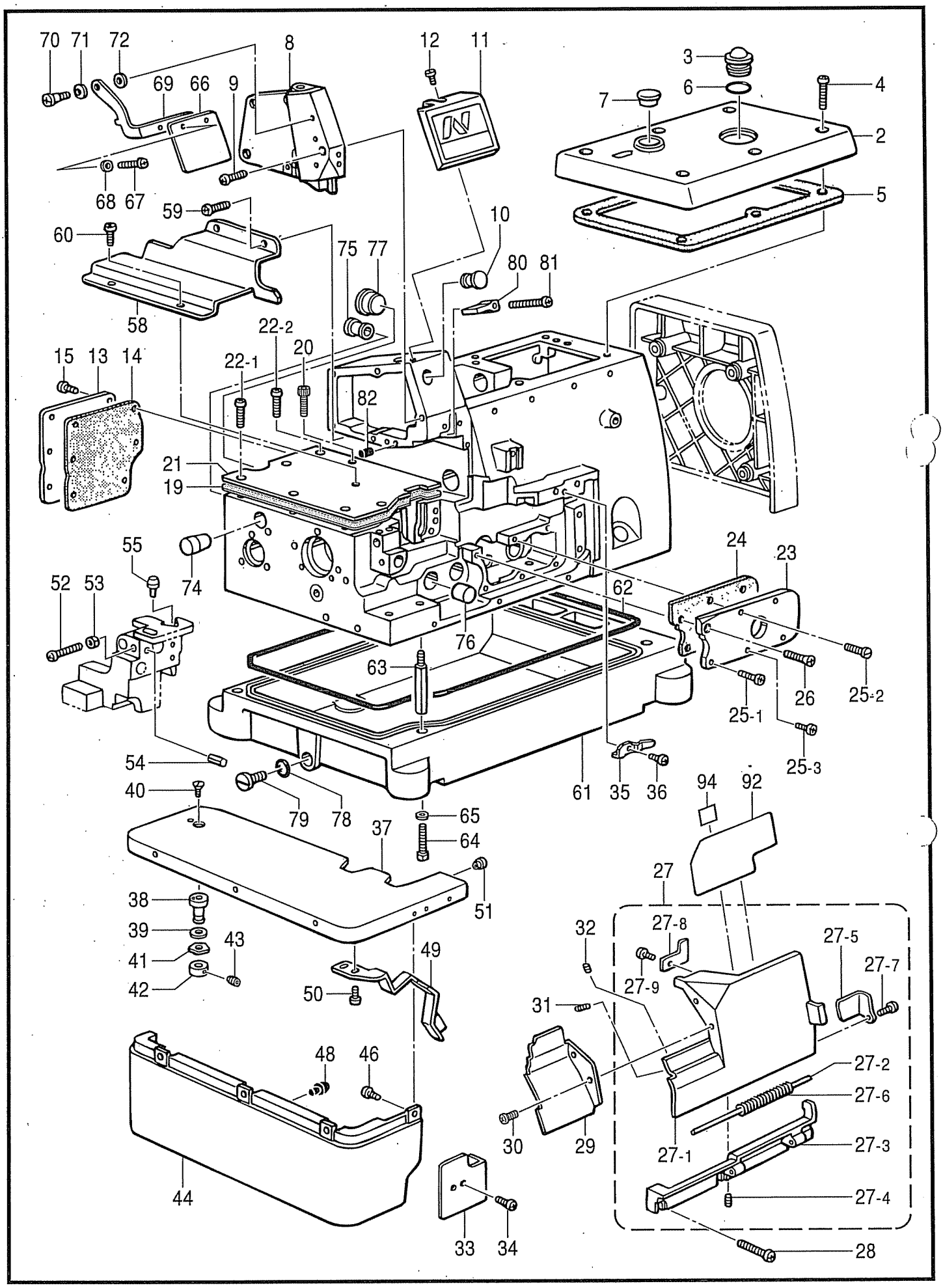

878-N21-052

A．フレーム関係 / Machine body

REF.NO	CODE	Q'TY	ヒンメイ	NAME OF PARTS	RM
58	S39626021	1	ｸﾛｽﾌﾟﾚｰﾄヌノｱﾝﾅｲ	CLOTH GUIDE	
59	060400612	2	ﾊﾞｲﾝﾄﾞM4X6	SCREW, BIND M4X6	
60	060400512	1	ﾊﾞｲﾝﾄﾞM4X5	SCREW, BIND M4X5	
61	S20338200	1	ｱﾌﾞﾗｳｹ	OIL PAN	
62	S20339000	1	ﾊﾟｯｷﾝ	PACKING	
63	S23350001	4	ﾎﾝﾀｲｼﾁｭｳ	MACHINE BODY LEG	
64	017501212	4	ﾎﾞﾙﾄ5X12	BOLT, M5X12	
65	S23351001	4	ｻﾞｶﾞﾈ	WASHER	
66	S00075000	1	ｱｲｶﾞｰﾄﾞ	EYE GUARD	
67	060350812	2	ﾊﾞｲﾝﾄﾞ35X8	SCREW, BIND M3.5X8	
68	025350332	2	ﾋﾗｻﾞｶﾞﾈﾀﾞｲ3.5	WASHER, PLAIN L 3.5	
69	S20340001	1	ｱｲｶﾞｰﾄﾞｻｻｴｲﾀ	EYE GUARD SUPPORT PLATE	
70	S20342001	1	ﾀﾞﾝﾈｼﾞ4	SHOULDER SCREW, M4	
71	146598001	1	ﾊﾞﾈｻﾞｶﾞﾈ	WASHER, BOWL SPRING	
72	025050132	1	ﾋﾗｻﾞｶﾞﾈｼｮｳ5	WASHER, PLAIN S 5	
74	S20344001	1	ｺﾞﾑｾﾝ16	RUBBER CAP, 16	
75	S20345001	1	ｺﾞﾑｾﾝ14	RUBBER CAP, 14	
76	154841001	1	ｺﾞﾑｾﾝ16.8	RUBBER CAP, 16.8	
77	S23337001	1	ｺﾞﾑｾﾝ18.5	RUBBER CAP, 18.5	
78	081009070	1	OﾘﾝｸﾞP9	0 RING P9	
79	S23357001	1	ｼﾒﾈｼﾞ10	SCREW, M10	
80	S20346000	1	ﾊﾘﾎﾞｳｱﾌﾞﾗｳｹ	OIL RESERVOIR, N-BAR	
81	062401612	1	ﾅﾍﾞｺM4X16	SCREW, PAN M4X16	
82	S20878000	1	ｺﾞﾑｾﾝ5.3	RUBBER CAP, 5.3	
92	S39784001	1	ｲﾄﾄｵｼｾﾂﾒｲﾗﾍﾞﾙC	THREADING DIAGRAM LABEL, D	
94	S44821001	1	ｾｲｿｳｼｼﾞﾗﾍﾞﾙ	LABEL, CLEANING	

B . 駆動軸関係 / Crankshaft mechanism

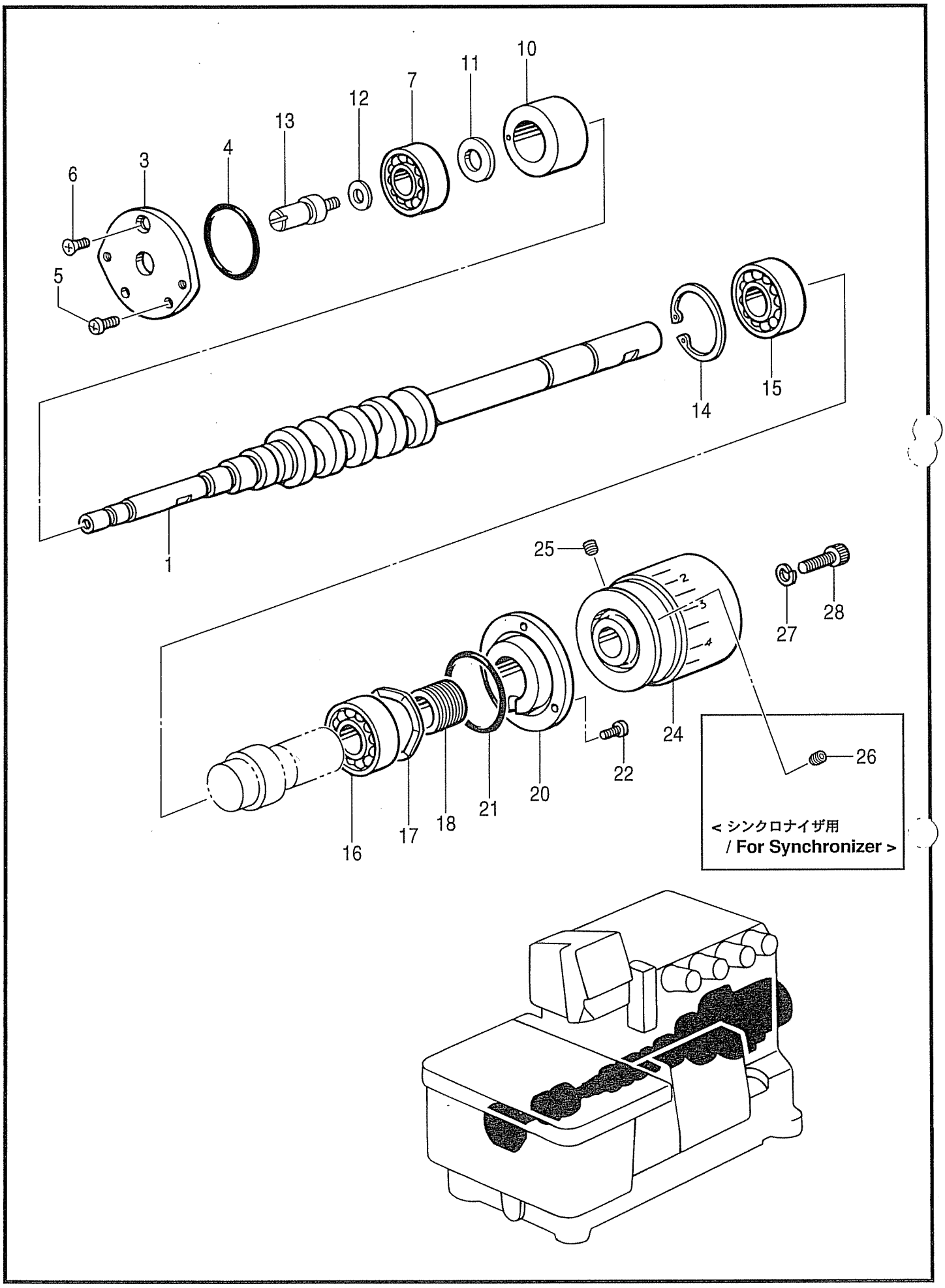

878-N21-103

B. 駆動軸関係 / Crankshaft mechanism

REF.NO	CODE	Q'TY	ヒンメイ	NAME OF PARTS	RM
			＜ﾊｲﾘﾌﾄ用＞	<For High lift>	
1	S54001001	1	ｸﾄﾞｳｼﾞｸR	CRANKSHAFT, R	
			＜超ﾊｲﾘﾌﾄ用＞	<For Extra high lift>	
1	S54002001	1	ｸﾄﾞｳｼﾞｸS	CRANKSHAFT, S	
3	S39629021	1	ﾍﾞｱﾘﾝｸﾞﾌﾀ	BEARING CAP	
4	081031870	1	Oﾘﾝｸﾞ S31.5	O RING, S31.5	
5	062400812	2	ﾅﾍﾞｺ4X8	SCREW, PAN M4X8	
6	061400812	1	ｻﾗｺM4X8	SCREW, FLAT M4X8	
7	072600000	1	ﾀﾏｼﾞｸｳｹ6000	BALL BEARING, 6000	
10	S39630000	1	ｸﾄﾞｳｼﾞｸﾒﾀﾙ	BUSH, CRANKSHAFT	
11	S20356001	1	ﾋﾗｻﾞｶﾞﾈ10	WASHER, PLAIN 10	
12	155559001	1	ﾋﾗｻﾞｶﾞﾈ	WASHER, PLAIN	
13	S46900001	1	ﾆｼﾞﾕｳｶﾝﾃﾝﾋﾞﾝｼﾞｸ	SHAFT, D/C STITCH THR/TAKE-UP	
14	048400242	1	ﾄﾒﾜｱﾅﾖｳC40	RETAINING RING, INTERNAL C40	
15	076203000	1	ﾀﾏｼﾞｸｳｹ6203	BALL BEARING, 6203	
16	S27868001	1	ﾀﾏｼﾞｸｳｹ6203V	BALL BEARING, 6203V	
17	S20361001	1	ﾅﾐﾊﾞﾈ	SPRING, WAVE	
18	S20362151	1	ｸﾄﾞｳｼﾞｸｵｲﾙｷﾘ	OIL REJECTOR, CRANKSHAFT	
20	S39631000	1	ﾍﾞｱﾘﾝｸﾞｵｻｴ	HOLDER, BEARING	
21	S20353000	1	Oﾘﾝｸﾞ	O RING	
22	062401012	3	ﾅﾍﾞｺM4X10	SCREW, PAN M4X10	
24	S39775001	1	ﾌﾟｰﾘ	PULLEY	
			＜ｼﾝｸﾛﾅｲｻﾞ用＞	<For Synchronizer>	
24	S39565101	1	ﾌﾟｰﾘ	PULLEY	
26	012060632	1	ｱﾅﾋﾗ6X6	SET SCREW, SOCKET (FT) M6X6	
25	012060632	1	ｱﾅﾋﾗ6X6	SET SCREW, SOCKET (FT) M6X6	
27	028060242	1	ﾊﾞﾈｻﾞｶﾞﾈ2-6	WASHER, SPRING 2-6	
28	018062532	1	ｱﾅﾎﾙﾄ6X25	BOLT, SOCKET M6X25	

C．針棒関係 / Needle bar mechanism

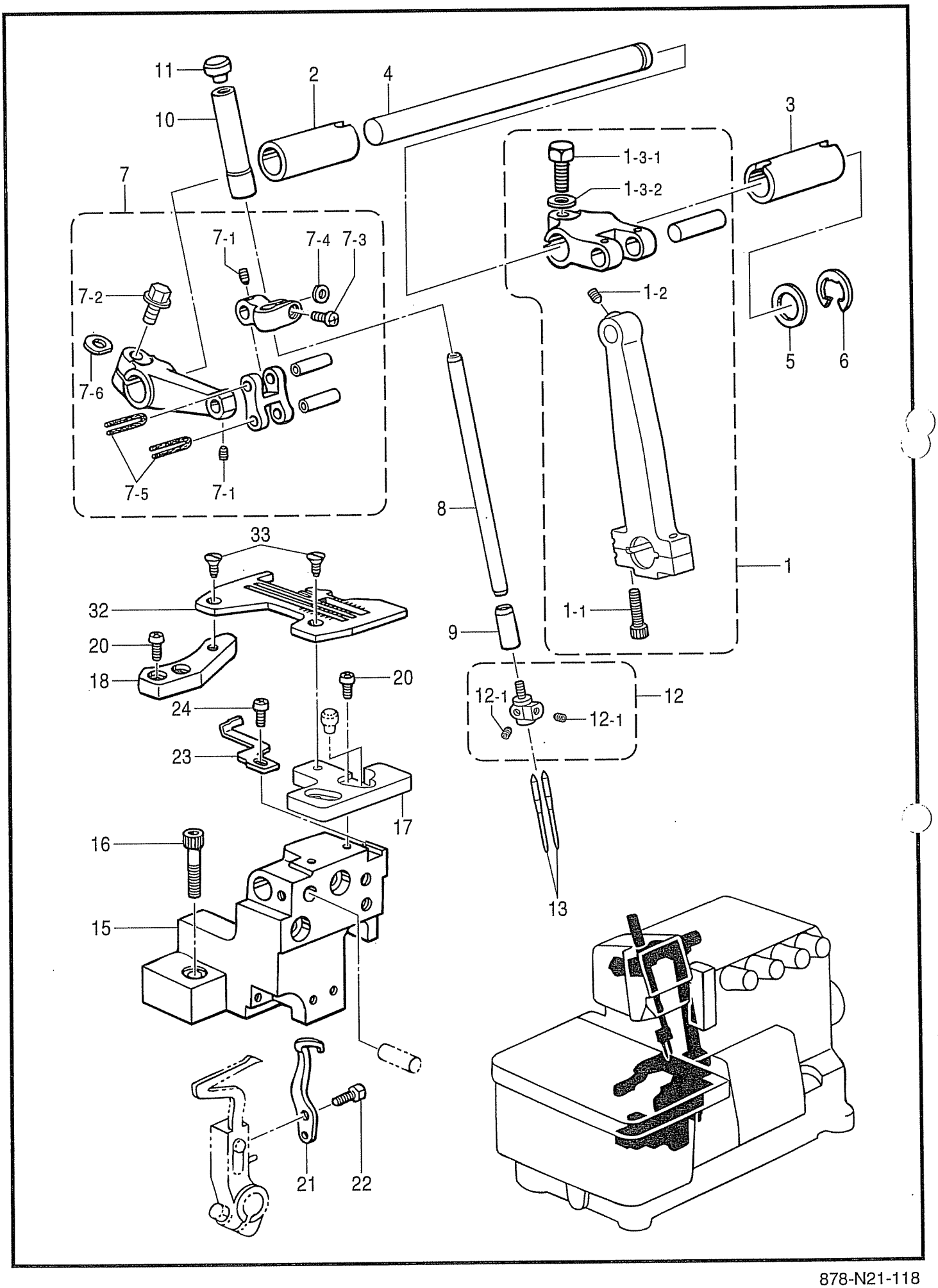

878-N21-118

C. 針棒関係 / Needle bar mechanism

REF.NO	CODE	Q'TY	ヒンメイ	NAME OF PARTS	RM
			＜ﾊｲﾘﾌﾄ用＞	<For High lift>	
1	S54006001	1	ﾊﾘｸﾗﾝｸﾛｯﾄﾞｸﾐH	NEEDLE D/CRANK ROD ASSY, H	
			＜超ﾊｲﾘﾌﾄ用＞	<For Extra high lift>	
1	S54007001	1	ﾊﾘｸﾗﾝｸﾛｯﾄﾞｸﾐE	NEEDLE D/CPANK ROD ASSY, E	
1-1	018401622	2	ｱﾅﾎﾞﾙﾄ4X16	BOLT, SOCKET M4X16	
1-2	S23342001	1	ｱﾅﾄｶﾞﾘ4X5	SET SCREW, SOCKET (CN) M4X5	
1-3-1	017061612	1	ﾎﾞﾙﾄ6X16	BOLT, M6X16	
1-3-2	118735002	1	ｻﾞｶﾞﾈ	WASHER, PLAIN	
2	S39644021	1	ﾊﾘｼﾞｸﾒﾀﾙL	BUSH, L ;NEEDLE SHAFT	
3	S39645021	1	ﾊﾘｼﾞｸﾒﾀﾙR	BUSH, R ;NEEDLE SHAFT	
4	S39646021	1	ﾊﾘｼﾞｸ	NEEDLE SHAFT	
5	S39647000	1	ｻﾞｶﾞﾈ	WASHER	
6	146293001	1	ﾄﾒﾜE10	RETAINING RING, E10	
7	S39566001	1	ﾊﾘﾎﾞｳﾀﾞｷｸﾐ	NEEDLE BAR CLAMP ASSY	
7-1	S23342001	2	ｱﾅﾄｶﾞﾘ4X5	SET SCREW, SOCKET (CN) M4X5	
7-2	S46899001	1	ｻﾞｶﾞﾈﾂｷﾎﾞﾙﾄ6X16	BOLT, (W/WASHER) M6X16	
7-3	062350812	1	ﾅﾍﾞｺ3.5X8	SCREW, PAN M3.5X8	
7-4	S20391001	1	ｽﾍﾟｰｻ	SPACER	
7-5	S20392000	2	ﾌｪﾙﾄ	FELT	
7-6	155162001	1	ｽﾍﾟｰｻ	SPACER	
8	S39574001	1	ﾊﾘﾎﾞｳ	NEEDLE BAR	
9	S39648021	1	ﾊﾘﾎﾞｳﾒﾀﾙD	BUSH, D ;NEEDLE BAR	
10	S39571021	1	ﾊﾘﾎﾞｳﾒﾀﾙU	BUSH, U ;NEEDLE BAR	
11	104450101	1	ｺﾞﾑｾﾝ8	RUBBER CAP, 8	
12	*	1	ﾊﾘﾄﾞﾒ2.2ｸﾐ	NEEDLE CLAMP ASSY, 2.2	
12-1	146427001	2	ｱﾅﾄﾒﾈｼﾞ3.18ｸﾎﾞﾐ	SET SCREW, SOCKET (CP) SM3.18	
13	*	2	ﾐｼﾝﾊﾘDCX27	NEEDLE, DCX27 (#7)	
15	S39649021	1	ﾊﾘｲﾀｻｻｴﾀﾞｲ	SUPPORT BRACKET, N-PLATE	
16	018062532	2	ｱﾅﾎﾙﾄ6X25	BOLT, SOCKET M6X25	
17	S39650051	1	ﾊﾘｲﾀｻｻｴｲﾀF	NEEDLE PLATE SUPPORT, F	
18	S39652021	1	ﾊﾘｲﾀｻｻｴｲﾀB	NEEDLE PLATE SUPPORT, B	
20	062401012	4	ﾅﾍﾞｺM4X10	SCREW, PAN M4X10	
21	S20415101	1	ｲﾄﾞｳﾊﾘｳｹ	NEEDLE GUARD, MOVABLE	
22	S20416101	1	ﾎﾞﾙﾄ3.5X10	BOLT, M3.5X10	
23	S39653051	1	ﾊﾘｳｹF	NEEDLE GUARD, F	
24	062350812	1	ﾅﾍﾞｺ3.5X8	SCREW, PAN M3.5X8	
32	*	1	ﾊﾘｲﾀ	NEEDLE PLATE	
33	100032003	2	ｻﾗﾈｼﾞ4.37	SCREW, FLAT SM4.37-40X8	

D . 針冷却関係 / Needle cooler

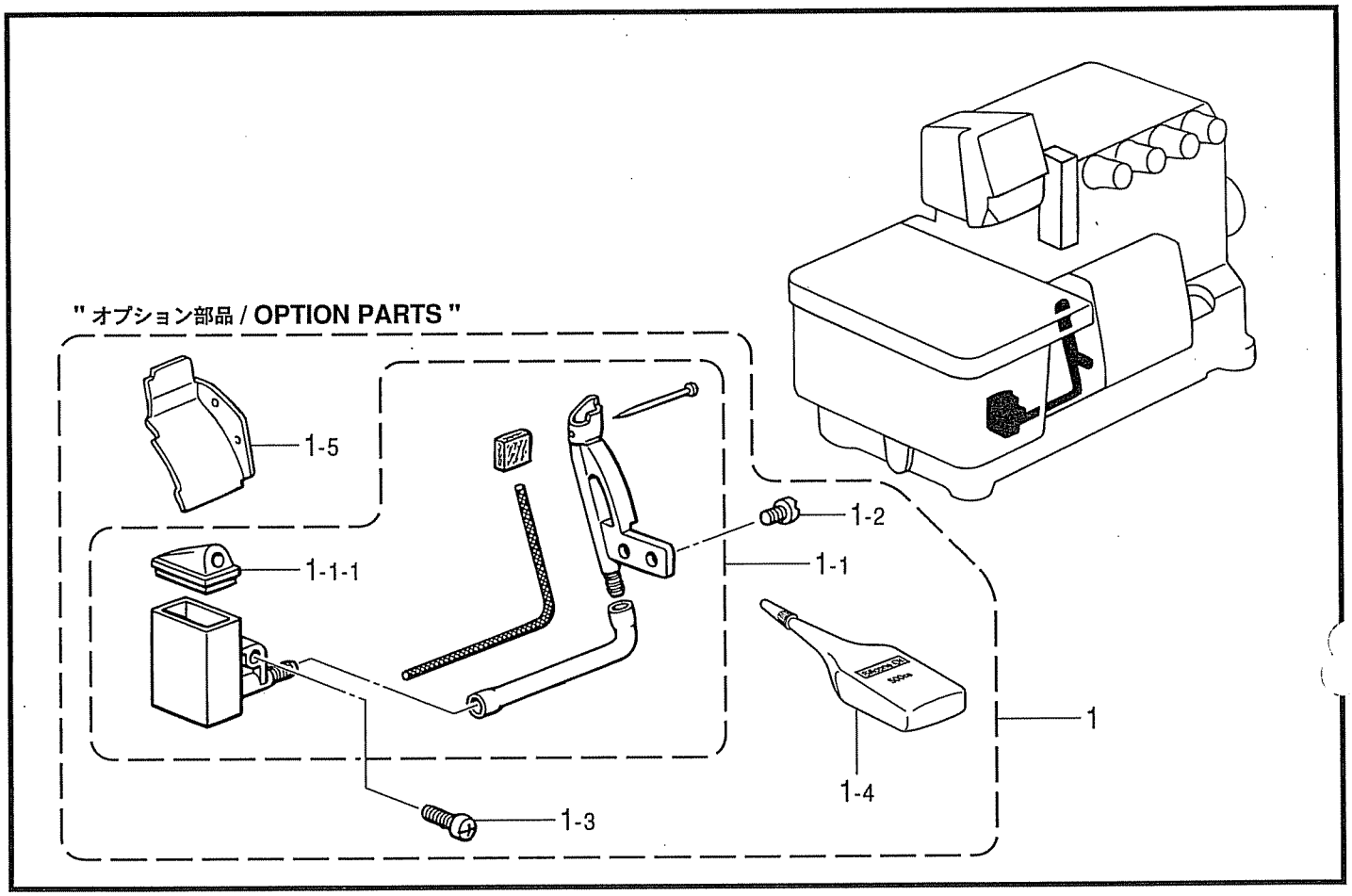

878-N21-124

E . 縁カガリ定規関係 / Serging attachment

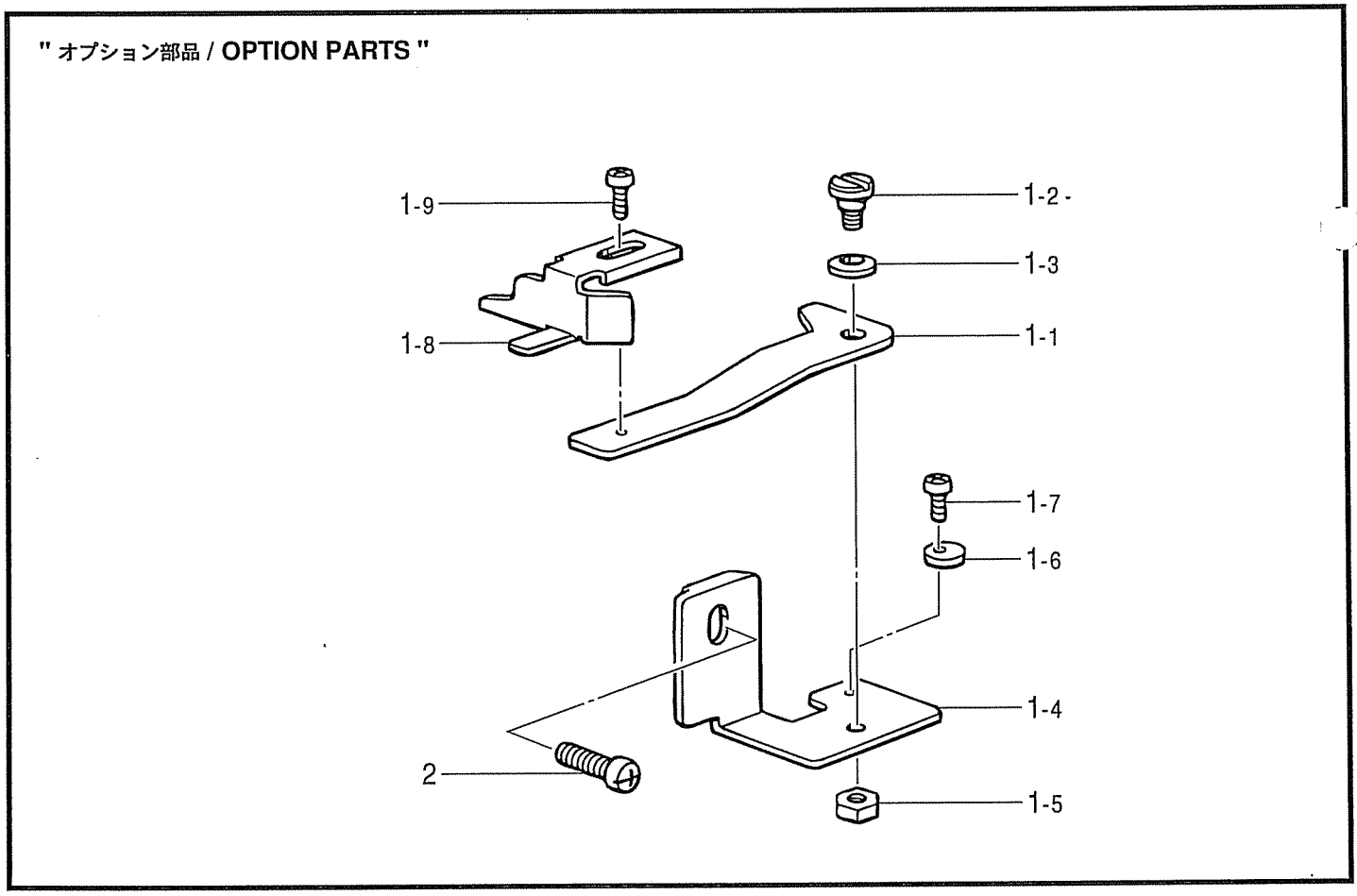

878-N21-236

D. 針冷却関係 / Needle cooler

REF.NO	CODE	Q'TY	ヒンメイ	NAME OF PARTS	RM
			”ｵﾌﾟｼｮﾝ部品”	"OPTION PARTS"	
1	S43524001	1	ﾊﾘﾚｲｷｬｸｾﾂﾄO	NEEDLE COOLER SET, O	
1-1	S20453001	1	ﾌｪﾙﾄｻﾎｴｸﾐ	FELT SUPPORT ASSY	
1-1-1	S20460000	1	ｼﾘｺﾝﾀﾝｸﾌﾀ	CAP, SILICONE TANK	
1-2	S23418002	2	ｼﾒﾈｼﾞ4X5	SCREW, M4X5	
1-3	060401012	1	ﾊﾞｲﾝﾄﾞM4X10	SCREW, BIND M4X10	
1-4	S06704001	1	ｼﾘｺﾝｵｲﾙ	SILICONE OIL	
1-5	S20323101	1	ﾏｴｶﾊﾞｰS	FRONT COVER, S	

878-N21-124

E. 縁カガリ定規関係 / Serging attachment

REF.NO	CODE	Q'TY	ヒンメイ	NAME OF PARTS	RM
			”ｵﾌﾟｼｮﾝ部品”	"OPTION PARTS"	
1	S21336101	1	ﾌﾁｶｶﾞﾘｼﾞﾖｳｷﾞｸﾐ	EDGE GUIDE ASSY	
1-1	S23896101	1	ｼﾞﾖｳｷﾞﾄﾘﾂｹｲﾀ	SETTING PLATE, ;EDGE GUIDE	
1-2	S23773001	1	ﾀﾞﾝﾈｼﾞ4	SHOULDER SCREW, M4	
1-3	146598001	1	ﾊﾞﾈｻﾞｶﾞﾈ	WASHER, BOWL SPRING	
-4	S23897001	1	ｼﾞﾖｳｷﾞﾄﾘﾂｹｲﾀｻｻｴ	EDGE GUIDE SUPPORT	
1-5	021400212	1	2ｼﾕﾅﾂﾄ4	NUT, 2 M4	
1-6	S21341001	1	ｽﾄﾂﾊﾟｰ	STOPPER	
1-7	062300512	1	ﾅﾍﾞｺ3X5	SCREW, PAN M3X5	
1-8	146762001	1	ﾌﾁｶｶﾞﾘｼﾞﾖｳｷﾞ	EDGE GUIDE	
1-9	062350612	1	ﾅﾍﾞｺM3.5X6	SCREW, PAN M3.5X6	
2	062401012	1	ﾅﾍﾞｺM4X10	SCREW, PAN M4X10	

F1．押工関係 / Presser foot mechanism

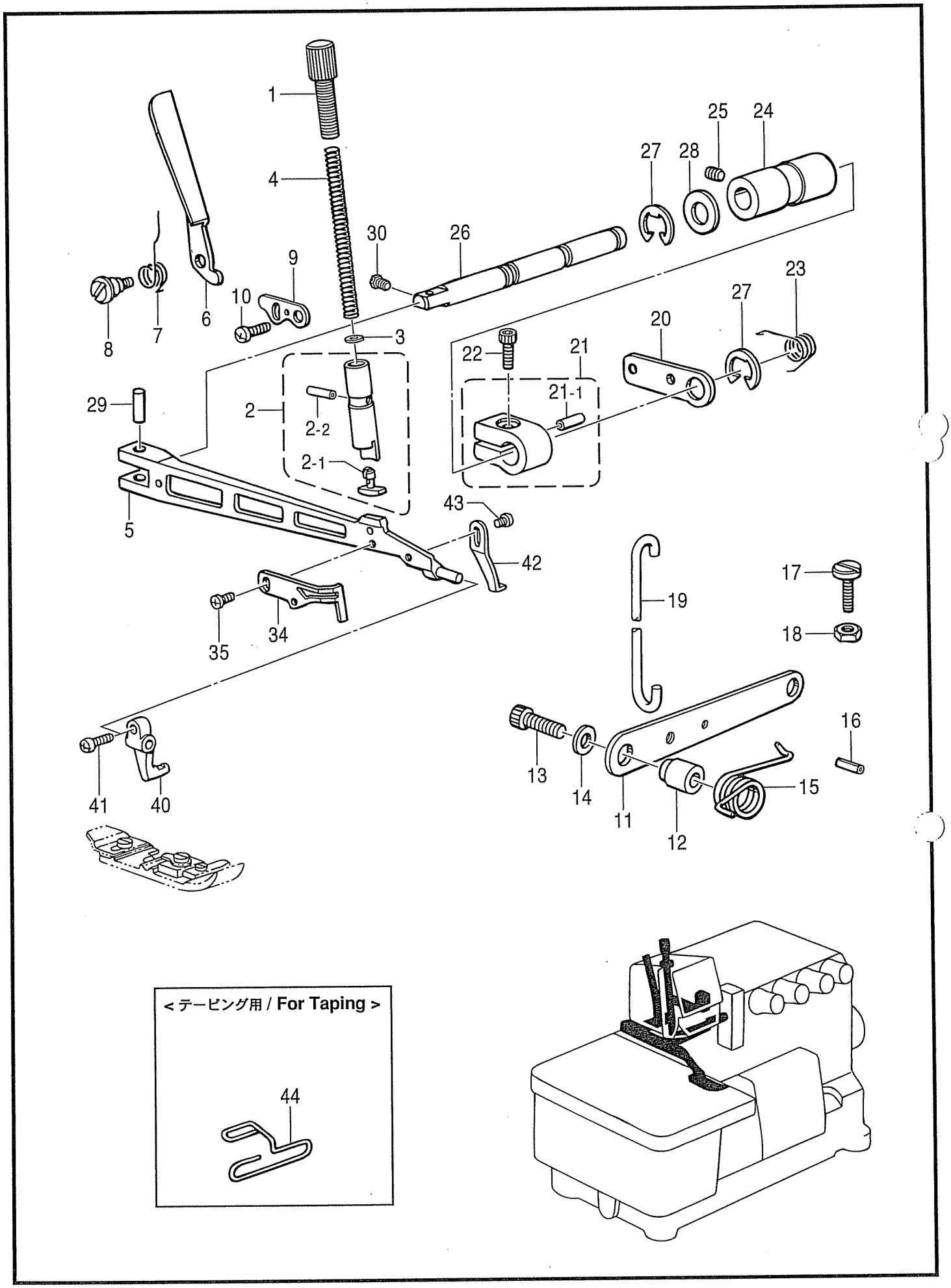

878-N21-201

F1. 押エ関係 / Presser foot mechanism

REF.NO	CODE	Q'TY	ヒンメイ	NAME OF PARTS	RM
1	S39658001	1	ｵｻｴﾁｮｳｾﾂﾈｼﾞ	ADJUSTING SCREW, PRESSER	
2	S39575001	1	ｵｻｴﾎﾞｳｸﾐ	PRESSER BAR ASSY	
2-1	S39577000	1	ｵｻｴｸｯｼｮﾝ	CUSHION	
2-2	047301642	1	ｽﾌﾟﾘﾝｸﾞﾋﾟﾝAW3	SPRING PIN AW3	
3	105161004	1	ｻﾞｶﾞﾈ	WASHER, PLAIN	
4	S20476001	1	ｵｻｴﾊﾞﾈ	PRESSER SPRING	
5	S38308121	1	ｼｭｵｻｴｳﾃﾞ	MAIN PRESSER ARM	
6	S39659021	1	ｵｻｴﾃｱｹﾞ	PRESSER BAR LIFTER	
7	S39660001	1	ｵｻｴﾃｱｹﾞﾊﾞﾈ	SPRING, PRESSER BAR LIFTER	
8	S39661001	1	ﾀﾞﾝﾈｼﾞ4	SHOULDER SCREW, M4	
9	S39662001	1	ｼｭｵｻｴｳﾃﾞｽﾄｯﾊﾟ	MAIN PRESSER ARM STOPPER	
10	060400612	1	ﾊﾞｲﾝﾄﾞM4X6	SCREW, BIND M4X6	
11	S39663121	1	ｵｻｴｱｼｱｹﾞﾚﾊﾞｰ	PRESSER FOOT LIFTER LEVER	
12	S39664101	1	ｵｻｴｱｼｱｹﾞﾚﾊﾞｰｶﾗｰ	COLLAR	
13	018062532	1	ｱﾅﾎﾙﾄ6X25	BOLT, SOCKET M6X25	
14	025060332	1	ﾋﾗｻﾞｶﾞﾈﾀﾞｲ6	WASHER, PLAIN L 6	
15	S39665001	1	ｵｻｴｱｼｱｹﾞﾚﾊﾞｰﾊﾞﾈ	SPRING	
16	047502542	1	ｽﾌﾟﾘﾝｸﾞﾋﾟﾝAW5	PIN, SPRING ROLL AW5	
17	S39770001	1	ｼﾒﾈｼﾞ4	SCREW, M4	
18	021400212	1	2ｼｭﾅｯﾄ4	NUT, 2 M4	
19	S20485001	1	ｵｻｴｱｹﾞﾘﾝｸ	PRESSER BAR LIFTER LINK	
20	S39666001	1	ｵｻｴｱｹﾞﾚﾊﾞｰ	LIFTER LEVER, ;P-BAR	
21	S39667021	1	ｵｻｴｱｹﾞｳﾃﾞｸﾐ	LIFTER ARM ASSY, ;P-BAR	
21-1	047401442	1	ｽﾌﾟﾘﾝｸﾞﾋﾟﾝAW4	PIN, DOWEL ;AW4	
22	018061632	1	ｱﾅﾎﾞﾙﾄ6X16	BOLT, SOCKET M6X16	
23	S39669101	1	ｵｻｴｱｹﾞﾚﾊﾞｰﾊﾞﾈ	SPRING	
24	S39670000	1	ｵｻｴｳﾃﾞｼﾞｸﾒﾀﾙ	BUSH, ;P-ARM SHAFT	
25	012060632	1	ｱﾅﾋﾗ6X6	SET SCREW, SOCKET (FT) M6X6	
26	S39671121	1	ｵｻｴｳﾃﾞｼﾞｸ	PRESSER ARM SHAFT	
27	048090342	2	ﾄﾒﾜE9	RETAINING RING, E9	
28	S30562000	1	ｻﾞｶﾞﾈ	WASHER	
29	S39672001	1	ｵｻｴｳﾃﾞﾋﾟﾝ	PIN, ;P-ARM	
30	S46903001	1	ｱﾀﾏﾂｷﾄﾒﾈｼﾞ4X5	SET SCREW, M4X5	
34	S37070121	1	ﾌｲﾝｶﾞｰｶﾞｰﾄﾞV	FINGER GUARD, V	
35	060300412	1	ﾊﾞｲﾝﾄﾞM3X4	SCREW, BIND M3X4	
40	S20494001	1	ﾌｸｵｻｴｳﾃﾞ	SUB PRESSER ARM	
41	062670712	1	ﾅﾍﾞｺ357-40X7	SCREW, PAN SM3.57-40X7	
42	S20495001	1	ｵｻｴｽﾄｯﾊﾟｰ	PRESSER FOOT STOPPER	
43	060300612	1	ﾊﾞｲﾝﾄﾞ M3X6	SCREW, BIND M3X6	
			<ﾃｰﾋﾟﾝｸﾞ用>	<For Taping>	
44	S23364000	1	ﾃｰﾌﾟｱﾝﾅｲ	TAPE GUIDE	

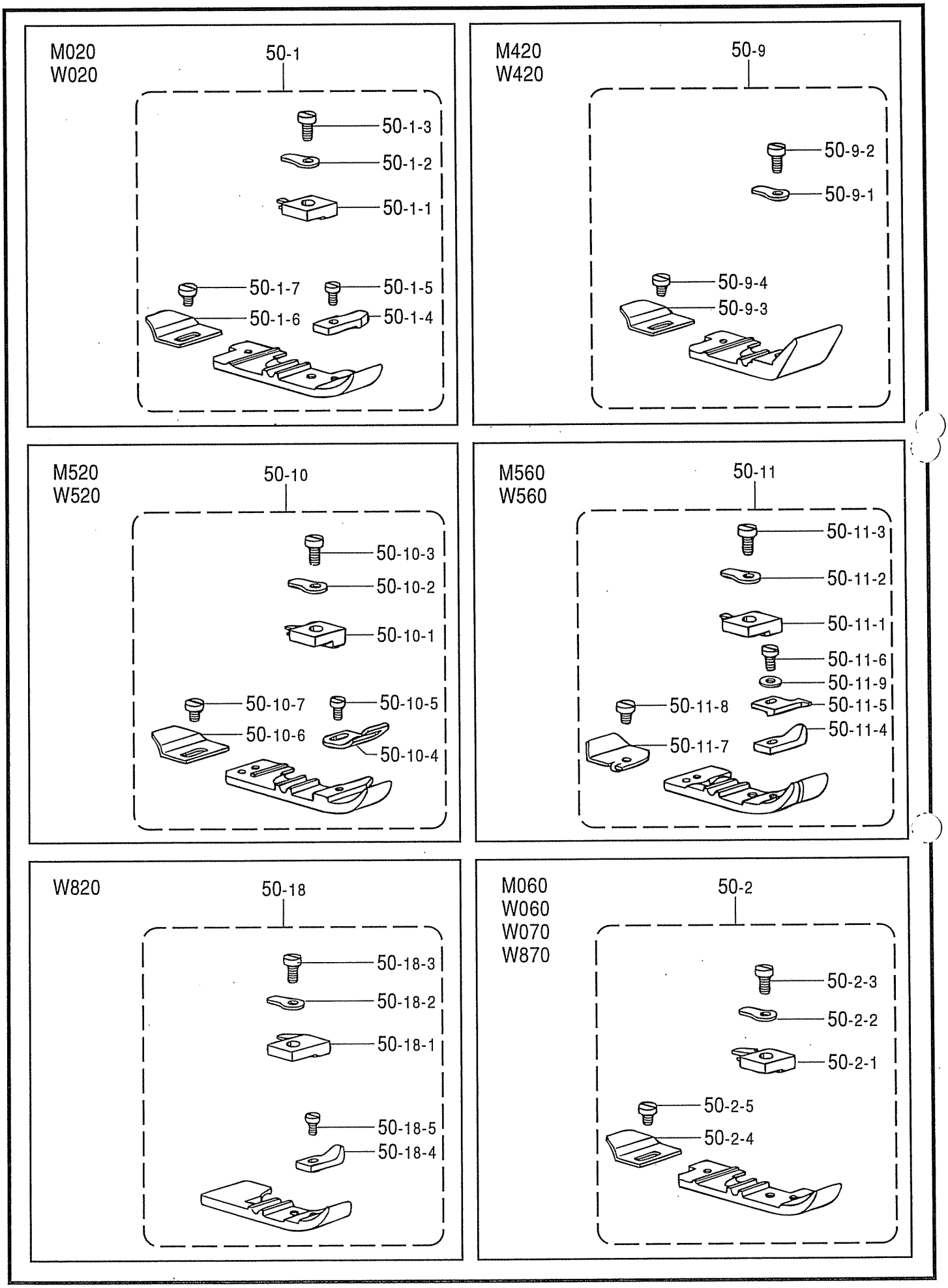
M020
W020
50-1
50-1-3
50-1-2
50-1-1
50-1-7
50-1-5
50-1-6
50-1-4
M420
W420
50-9
50-9-2
50-9-1
50-9-4
50-9-3
M520
W520
50-10
50-10-3
50-10-2
50-10-1
50-10-7
50-10-5
50-10-6
50-10-4
M560
W560
50-11
50-11-3
50-11-2
50-11-1
50-11-6
50-11-9
50-11-8
50-11-5
50-11-4
50-11-7
W820
50-18
50-18-3
50-18-2
50-18-1
50-18-5
50-18-4
M060
W060
W070
W870
50-2
50-2-3
50-2-2
50-2-1
50-2-5
50-2-4

878-N21-201

F2. 押エ関係 / Presser foot mechanism

REF.NO	CODE	Q'TY	ヒンメイ	NAME OF PARTS	RM
			<M020,M021,W0S0,W020, W021>		
50-1	*	1	ｵｻｴｸﾐ	PRESSER FOOT ASSY	
50-1-1	*	1	ﾂﾒ	STITCH TONGUE	
50-1-2	S19496001	1	ｵｻｴﾄﾘﾂｹｲﾀ	SETTING PLATE, P-FOOT	
50-1-3	150755001	1	ｼﾒﾈｼﾞ3.18	SCREW, SM3.18	
50-1-4	S19258001	1	ｵｻｴF	PRESSER FOOT, F	
50-1-5	S01295001	1	ｼﾒﾈｼﾞ2.38X3.5	SCREW, SM2.38X3.5	
50-1-6	S19259001	1	ｵｻｴB	PRESSER FOOT, B	
50-1-7	140530002	1	ｼﾒﾈｼﾞ2.38	SCREW, SM2.38	
			<M420,W420>		
50-9	*	1	ｵｻｴｸﾐ	PRESSER FOOT ASSY	
50-9-1	S19496001	1	ｵｻｴﾄﾘﾂｹｲﾀ	SETTING PLATE, P-FOOT	
50-9-2	106640001	1	ｼﾒﾈｼﾞ3.18	SCREW, SM3.18	
50-9-3	S19259001	1	ｵｻｴB	PRESSER FOOT, B	
50-9-4	140530002	1	ｼﾒﾈｼﾞ2.38	SCREW, SM2.38	
			<M520,W520>		
50-10	*	1	ｵｻｴｸﾐ	PRESSER FOOT ASSY	
50-10-1	*	1	ﾂﾒ	STITCH TONGUE	
50-10-2	S19496001	1	ｵｻｴﾄﾘﾂｹｲﾀ	SETTING PLATE, P-FOOT	
50-10-3	150755001	1	ｼﾒﾈｼﾞ3.18	SCREW, SM3.18	
50-10-4	S19296001	1	ﾃｰﾌﾟｶﾞｲﾄﾞ	TAPE GUIDE	
50-10-5	105288001	1	ｼﾒﾈｼﾞ2.38	SCREW, SM2.38	
50-10-6	S19259001	1	ｵｻｴB	PRESSER FOOT, B	
50-10-7	140530002	1	ｼﾒﾈｼﾞ2.38	SCREW, SM2.38	
			<M560,W560>		
50-11	*	1	ｵｻｴｸﾐ	PRESSER FOOT ASSY	
50-11-1	*	1	ﾂﾒ	STITCH TONGUE	
50-11-2	S19496001	1	ｵｻｴﾄﾘﾂｹｲﾀ	SETTING PLATE, P-FOOT	
50-11-3	150755001	1	ｼﾒﾈｼﾞ3.18	SCREW, SM3.18	
50-11-4	S19279001	1	ｵｻｴF	PRESSER FOOT, F	
50-11-5	S19300001	1	ﾃｰﾌﾟｶﾞｲﾄﾞ	TAPE GUIDE	
50-11-6	062630612	1	ﾅﾍﾞｺ238-56X6	SCREW, PAN SM2.38-56X6	
50-11-7	S19299001	1	ｵｻｴB	PRESSER FOOT, B	
50-11-8	140530002	1	ｼﾒﾈｼﾞ2.38	SCREW, SM2.38	
50-11-9	026260136	1	ﾋﾗｻﾞｶﾞﾈｺｶﾞﾀ2.6	WASHER, PLAIN S 2.6	
			<W82S,W820>		
50-18	*	1	ｵｻｴｸﾐ	PRESSER FOOT ASSY	
50-18-1	*	1	ﾂﾒ	STITCH TONGUE	
50-18-2	S19496001	1	ｵｻｴﾄﾘﾂｹｲﾀ	SETTING PLATE, P-FOOT	
50-18-3	150755001	1	ｼﾒﾈｼﾞ3.18	SCREW, SM3.18	
50-18-4	S19279001	1	ｵｻｴF	PRESSER FOOT, F	
50-18-5	060630412	1	ﾊﾞｲﾝﾄﾞ238-56X4	SCREW, BIND SM2.38-56X4	
			<M060,W060,W070, W870>		
50-2	*	1	ｵｻｴｸﾐ	PRESSER FOOT ASSY	
50-2-1	*	1	ﾂﾒ	STITCH TONGUE	
50-2-2	S19496001	1	ｵｻｴﾄﾘﾂｹｲﾀ	SETTING PLATE, P-FOOT	
50-2-3	150755001	1	ｼﾒﾈｼﾞ3.18	SCREW, SM3.18	
50-2-4	S19259001	1	ｵｻｴB	PRESSER FOOT, B	
50-2-5	140530002	1	ｼﾒﾈｼﾞ2.38	SCREW, SM2.38	

M620
W620

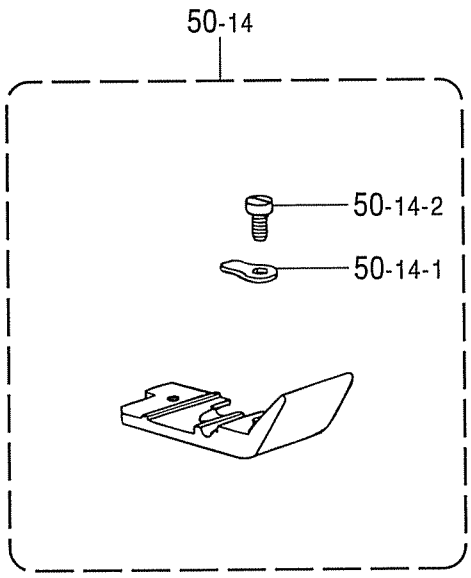

M040
W040

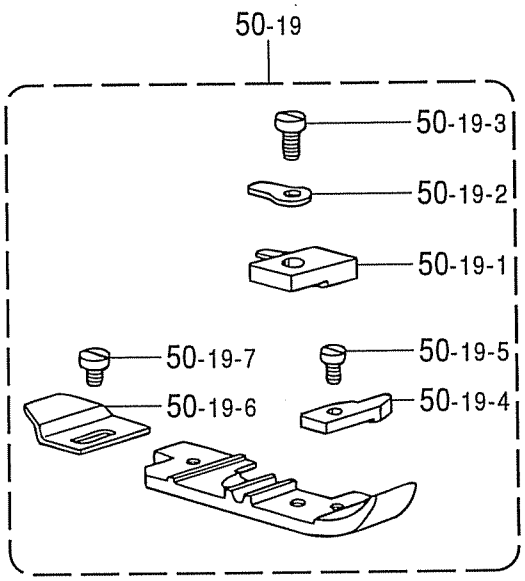

W050

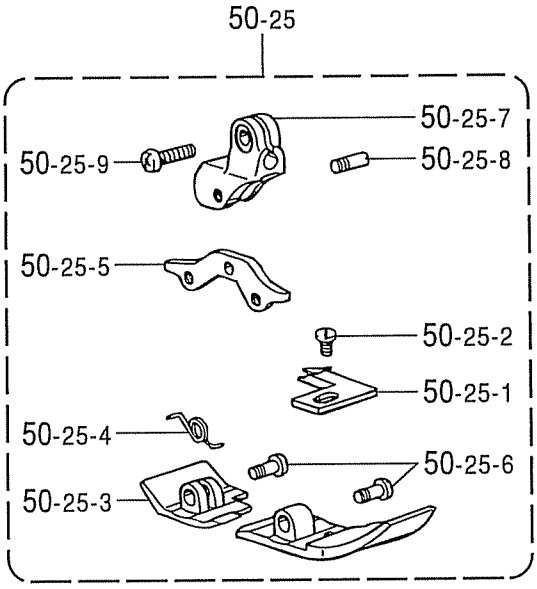

878-N21-201

F2. 押エ関係 / Presser foot mechanism

REF.NO	CODE	Q'TY	ヒンメイ	NAME OF PARTS	RM
			<M620,W620>		
50-14	*	1	ｵｻｴｸﾐ	PRESSER FOOT ASSY	
50-14-1	S19496001	1	ｵｻｴﾄﾘﾂｹｲﾀ	SETTING PLATE, P-FOOT	
50-14-2	106640001	1	ｼﾒﾈｼﾞ3.18	SCREW, SM3.18	
			<M040,W040,W050>		
50-19	*	1	ｵｻｴｸﾐ	PRESSER FOOT ASSY	
50-19-1	*	1	ﾂﾒ	STITCH TONGUE	
50-19-2	S19496001	1	ｵｻｴﾄﾘﾂｹｲﾀ	SETTING PLATE, P-FOOT	
50-19-3	150755001	1	ｼﾒﾈｼﾞ3.18	SCREW, SM3.18	
50-19-4	S29870001	1	ｵｻｴF	PRESSER FOOT, F	
50-19-5	S01295001	1	ｼﾒﾈｼﾞ2.38X3.5	SCREW, SM2.38X3.5	
50-19-6	S19259001	1	ｵｻｴB	PRESSER FOOT, B	
50-19-7	140530002	1	ｼﾒﾈｼﾞ2.38	SCREW, SM2.38	
			<W050>		
50-25	*	1	ｵｻｴｸﾐ	PRESSER FOOT ASSY	
50-25-1	*	1	ﾂﾒ	STITCH TONGUE	
50-25-2	S01295001	1	ｼﾒﾈｼﾞ2.38X3.5	SCREW, SM2.38X3.5	
50-25-3	S30901001	1	ｵｻｴB	PRESSER FOOT, B	
50-25-4	S30902001	1	ｵｻｴBﾈｼﾞﾘﾊﾞﾈ	SPRING TWIST	
50-25-5	S30903001	1	ｵｻｴFBｻｻｴ	PRESSER FOOT, FB SUPPORT	
50-25-6	S30904001	2	ｵｻｴFBｻｻｴﾈｼﾞ	SCREW, PRESSER FOOT SUPPORT	
50-25-7	S30905001	1	ﾌｸｵｻｴｳﾃﾞ	SUB PRESSER ARM	
50-25-8	S19311101	1	ｵｻｴｻｻｴﾈｼﾞ	SCREW	
50-25-9	062670712	1	ﾅﾍﾞｺ357-40X7	SCREW, PAN SM3.57-40X7	

G . 送り関係 / Feed mechanism

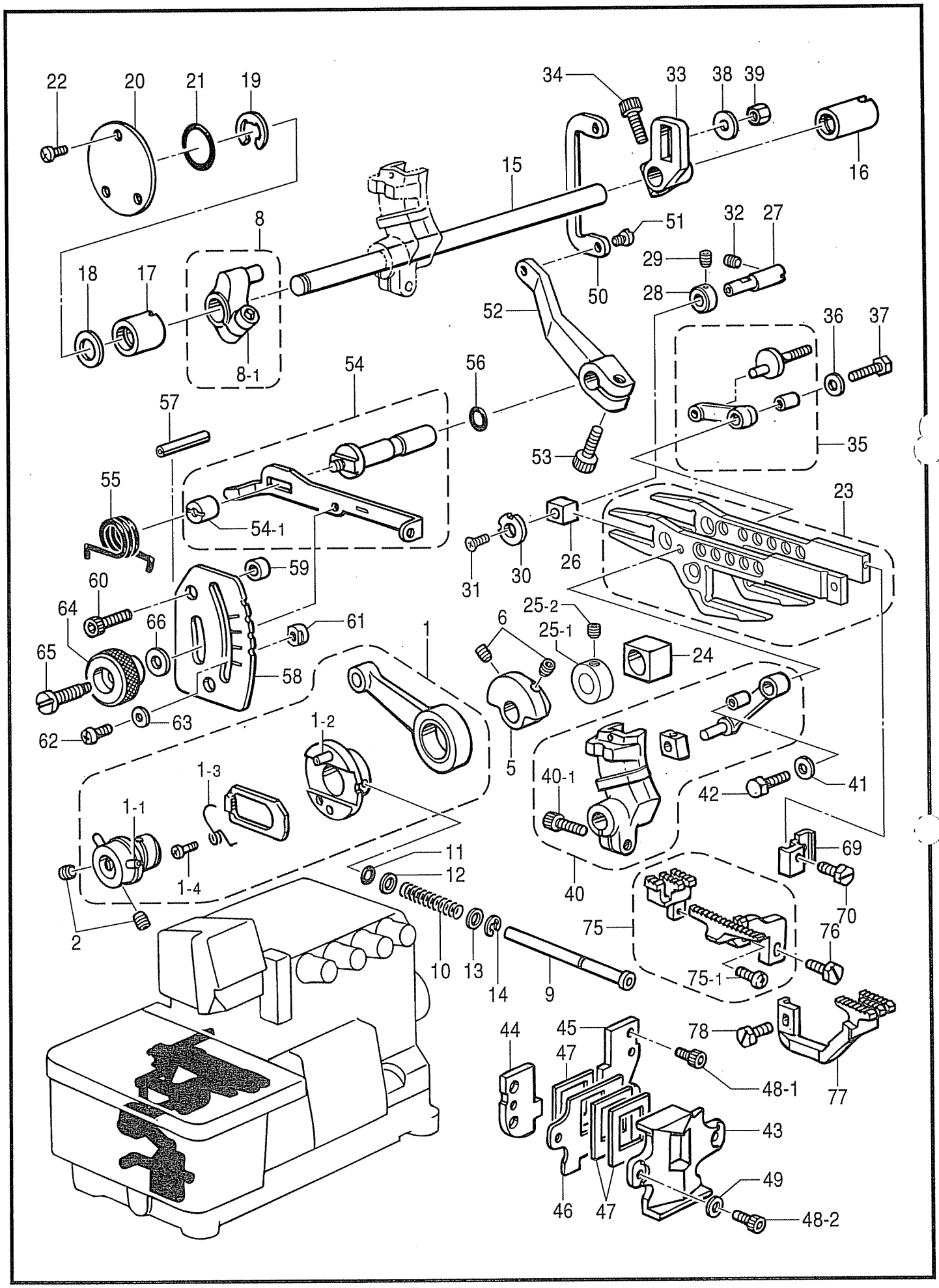

878-N21-202

G. 送り関係 / Feed mechanism

REF.NO	CODE	Q'TY	ヒンメイ	NAME OF PARTS	RM
1	S39578001	1	ﾍﾝｼﾝﾘﾝｸﾐ	ECCENTRIC WHEEL ASSY	
1-1-1	047301242	2	ｽﾌﾟﾘﾝｸﾞﾋﾟﾝAW3	PIN, SPRING ROLL AW3	
1-2-1	047301242	1	ｽﾌﾟﾘﾝｸﾞﾋﾟﾝAW3	PIN, SPRING ROLL AW3	
1-3	S39585001	1	ﾗﾁｴﾂﾄﾄﾒﾈｼﾞﾘﾊﾞﾈ	SPRING, TWIST	
1-4	S39586001	1	ﾊﾞﾈﾄﾒﾈｼﾞ3	SCREW, M3	
2	012060632	2	ｱﾅﾋﾗ6X6	SET SCREW, SOCKET (FT) M6X6	
5	S39673020	1	ﾊﾞﾗﾝｽｳｴｲﾄ	BALANCE WEIGHT	
6	012060632	2	ｱﾅﾋﾗ6X6	SET SCREW, SOCKET (FT) M6X6	
8	S39589021	1	ｵｸﾘｳﾃﾞｸﾐ	FEED ARM ASSY	
8-1	018061632	1	ｱﾅﾎﾞﾙﾄ6X16	BOLT, SOCKET M6X16	
9	S39674001	1	ｵｸﾘﾁﾖｳｾﾂﾎﾞﾀﾝｼﾞｸ	FEED ADJUSTING SHAFT	
10	S39675001	1	ﾎﾞﾀﾝｼﾞｸﾊﾞﾈ	SPRING, COMPRESSION	
11	081005070	1	OﾘﾝｸﾞP5	O RING, P5	
12	025710232	1	ﾋﾗｻﾞｶﾞﾈﾁｭｳ4.76	WASHER, PLAIN M 4.76	
13	025710232	1	ﾋﾗｻﾞｶﾞﾈﾁｭｳ4.76	WASHER, PLAIN M 4.76	
14	048040342	1	ﾄﾒﾜE4	RETAINING RING, E4	
15	S39676121	1	ｵｸﾘｼﾞｸ	FEED SHAFT	
16	S39677021	1	ﾒﾀﾙ11.11-17	BUSH, 11.11-17	
17	S39678021	1	ｵｸﾘｼﾞｸﾒﾀﾙL	BUSH, L ;FEED SHAFT	
18	S30562000	1	ｻﾞｶﾞﾈ	WASHER	
19	048090342	1	ﾄﾒﾜE9	RETAINING RING, E9	
20	S39679001	1	ｵｸﾘｼﾞｸﾒﾀﾙLﾌﾀ	CAP	
21	081020070	1	OﾘﾝｸﾞP20	O RING, P20	
22	060400612	3	ﾊﾞｲﾝﾄﾞM4X6	SCREW, BIND M4X6	
23	S50091001	1	ｵｸﾘﾀﾞｲｸﾐ	FEED BRACKET ASSY	
24	S38312050	1	ｼﾞﾖｳｹﾞｵｸﾘｶｸｺﾞﾏ	SLIDE BLOCK, F-LIFTING	
25-1	S44955001	1	ｾﾂﾄｶﾗｰ	SET SCREW COLLAR	
25-2	012060632	1	ｱﾅﾋﾗ6X6	SET SCREW, SOCKET (FT) M6X6	
26	S39683000	1	ｵｸﾘﾀﾞｲｶｸｺﾞﾏ	SLIDE BLOCK, F-BAR	
27	S39684021	1	ｵｸﾘﾀﾞｲｶｸｺﾏｼﾞｸ	SHAFT, ;SLIDE BLOCK	
28	S39685001	1	ｾﾂﾄｶﾗｰ	SET SCREW COLLAR	
29	012400432	1	ｱﾅﾋﾗ4X4	SET SCREW, SOCKET (FT) M4X4	
30	S20530001	1	ｻﾞｶﾞﾈ	WASHER	
31	004350812	1	+ｻﾗｺ35X8	SCREW, FLAT M3.5X8	
32	012400832	1	ｱﾅﾋﾗ4X8	SET SCREW, SOCKET (FT) M4X8	
33	S42042021	1	ｼﾕｵｸﾘｳﾃﾞ	MAIN FEED ARM	
34	018061632	1	ｱﾅﾎﾞﾙﾄ6X16	BOLT, SOCKET M6X16	
35	S39773001	1	ｼﾕｵｸﾘﾘﾝｸｸﾐ	MAIN FEED LINK ASSY	
36	S39690021	1	ｻﾞｶﾞﾈ	WASHER	
37	S23360001	1	ﾎﾞﾙﾄ5X15	BOLT, M5X15	
38	S02573020	1	ｻﾞｶﾞﾈ	WASHER	
39	S39691001	1	ﾅﾂﾄ5	NUT, M5	
40	S39769051	1	ｻﾄﾞｳｵｸﾘｳﾃﾞﾘﾝｸｸﾐ	DIF. FEED ARM LINK ASSY	
40-1	018061632	1	ｱﾅﾎﾞﾙﾄ6X16	BOLT, SOCKET M6X16	
41	S39690021	1	ｻﾞｶﾞﾈ	WASHER	
42	S23360001	1	ﾎﾞﾙﾄ5X15	BOLT, M5X15	
43	S38311100	1	ｵｸﾘﾀﾞｲｱﾝﾅｲｶﾊﾞｰ	COVER, FEED BAR GUIDE	
44	S39686000	1	ｵｸﾘﾀﾞｲｱﾝﾅｲL	FEED BAR GUIDE, L	
45	S39687000	1	ｵｸﾘﾀﾞｲｱﾝﾅｲR	FEED BAR GUIDE, R	
46	S39688001	1	ﾎﾞｳｼﾞﾝｲﾀｻｻｴ	FRAGMENT PROTECTOR PLATE	
47	S20526000	3	ﾎﾞｳｼﾞﾝｲﾀ	FRAGMENT PROTECTOR PLATE	
48-1	S43916001	4	ｱﾅﾎﾞﾙﾄ4X8ｼｰﾙ	BOLT, SOCKET M4X8 SEAL	
48-2	018400832	2	ｱﾅﾎﾞﾙﾄ4X8	BOLT, SOCKET M4X8	
49	025040132	2	ﾋﾗｻﾞｶﾞﾈｼﾖｳ4	WASHER, PLAIN S 4	
50	S39692021	1	ｻﾄﾞｳﾁﾖｳｾﾂﾘﾝｸ	DIF. FEED ADJUSTING LINK	
51	S20543101	1	ｼﾒﾈｼﾞ5	SCREW, M5	
52	S20544000	1	ｻﾄﾞｳﾘﾝｸﾚﾊﾞｰ	DIFFERENTIAL LINK LEVER	
53	018061432	1	ｱﾅﾎﾞﾙﾄ6X14	BOLT, SOCKET M6X14	
54	S39593021	1	ｻﾄﾞｳﾁﾖｳｾﾂﾚﾊﾞｰｸﾐ	DIF. FEED ADJUSTING LEVER ASSY	
54-1	S39596021	1	ﾏﾙﾅﾂﾄ6	NUT, ROUND M6	
55	S20547001	1	ﾚﾊﾞｰﾊﾞﾈ	SPRING	

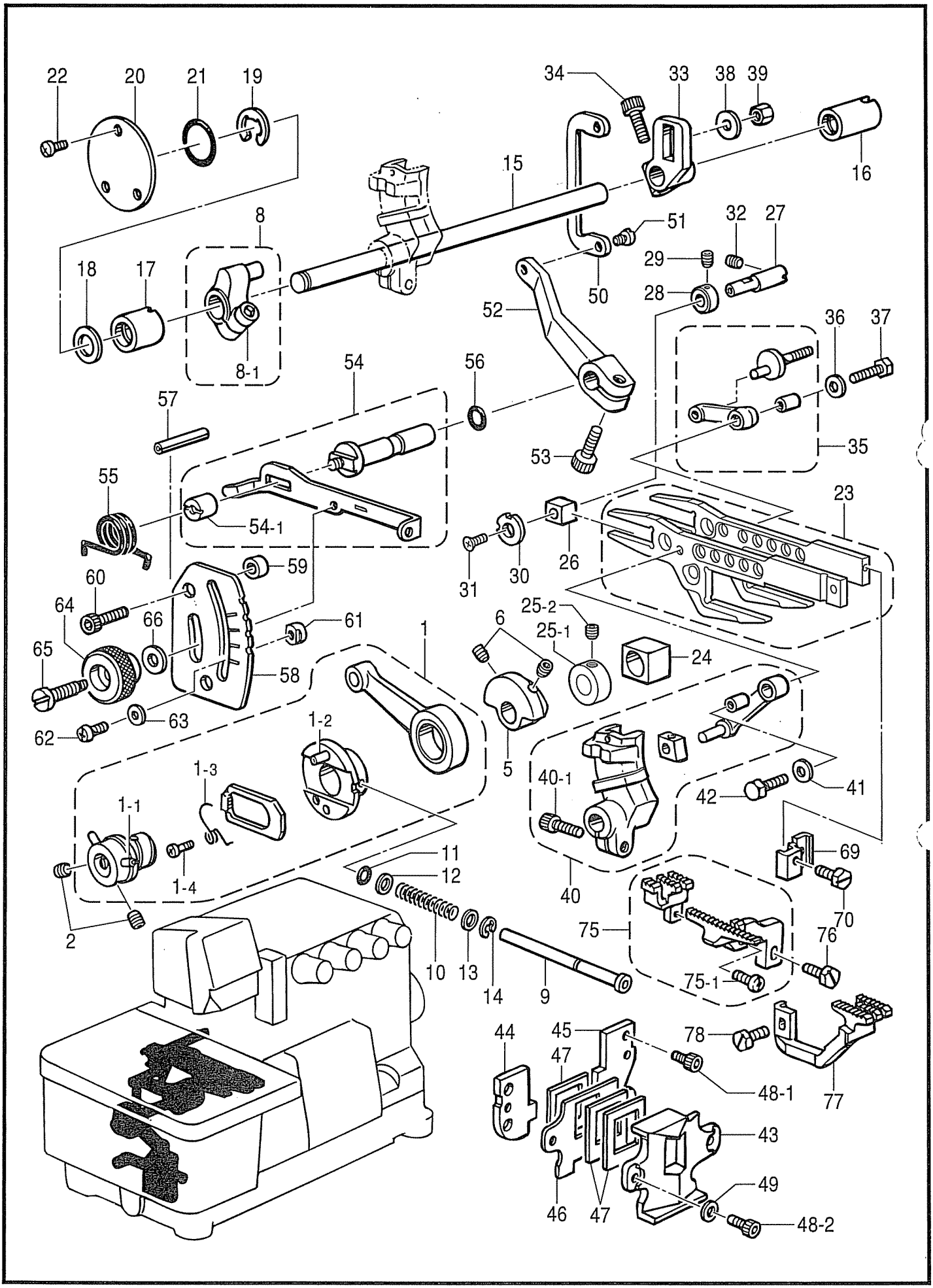
22
20
21
19
34
33
38
39
16
15
8
51
32
27
18
17
29
28
50
52
36
37
8-1
54
56
57
35
53
55
23
54-1
26
30
31
59
60
64
66
61
25-2
6
25-1
24
65
58
1
63
62
1-2
5
1-3
40-1
41
42
1-1
11
69
12
1-4
40
70
2
75
76
10
13
14
9
75-1
44
45
78
47
48-1
77
43
49
46
47
48-2

878-N21-202

G. 送り関係 / Feed mechanism

REF.NO	CODE	Q'TY	ヒンメイ	NAME OF PARTS	RM
56	081005670	1	OﾘﾝｸﾞPW5	O RING, PW5	
57	047502542	1	ｽﾌﾟﾘﾝｸﾞﾋﾟﾝAW5	PIN, SPRING ROLL AW5	
58	S39693001	1	ｻﾄﾞｳﾘﾖｳﾒﾓﾘｲﾀ	DIFFERENTIAL STITCH CONTROL	
59	S20548001	2	ｶﾗｰ	COLLAR	
60	018061632	2	ｱﾅﾎﾞﾙﾄ6X16	BOLT, SOCKET M6X16	
61	S25818051	2	ﾁﾖｳｾﾂﾚﾊﾞｰｽﾄﾂﾊﾟ	STOPPER, ;ADJUSTING LEVER	
62	060350812	2	ﾊﾞｲﾝﾄﾞ35X8	SCREW, BIND M3.5X8	
63	025350332	2	ﾋﾗｻﾞｶﾞﾈﾀﾞｲ3.5	WASHER, PLAIN L 3.5	
64	S39694021	1	ｾﾂﾄﾈｼﾞﾂﾏﾐ	KNOB, SCREW	
65	S39695001	1	ｾﾂﾄﾈｼﾞ	SET SCREW	
66	S20560001	1	ｻﾗﾊﾞﾈｻﾞｶﾞﾈ	WASHER, FLAT SPRING	
69	S23628101	1	ｼﾕｵｸﾘﾊﾞﾄﾘﾂｹﾀﾞｲ	FEED DOG SETTING BASE	
70	S23621101	1	ﾎﾞﾙﾄ35X8	BOLT, M3.5X8	
75	*	1	ｼﾕｵｸﾘﾊﾞｸﾐ	MAIN FEED DOG ASSY	
75-1	060630712	1	ﾊﾞｲﾝﾄﾞ238-56X7	SCREW, BIND SM2.38-56X7	
76	S23621101	1	ﾎﾞﾙﾄ35X8	BOLT, M3.5X8	
77	*	1	ｻﾄﾞｳｵｸﾘﾊﾞ	DIFFERENTIAL FEED DOG	
78	S23621101	1	ﾎﾞﾙﾄ35X8	BOLT, M3.5X8	

H . 上メス・下メス関係 / Knife mechanism

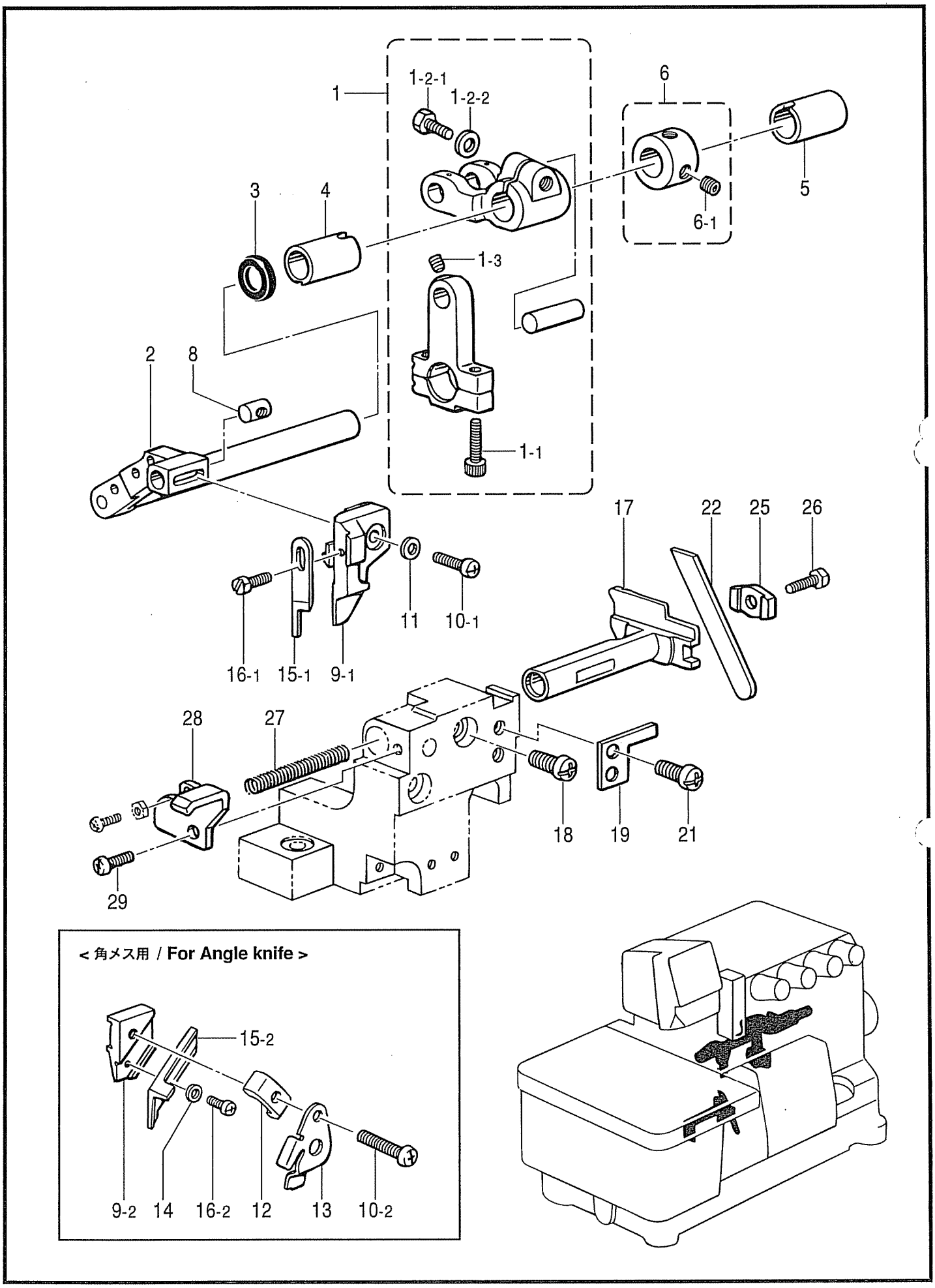

878-N21-222

H. 上メス・下メス関係 / Knife mechanism

REF.NO	CODE	Q'TY	ヒンメイ	NAME OF.PARTS	RM
1	S54008001	1	ｳﾜﾒｽｸﾗﾝｸﾛｯﾄﾞｸﾐ0	U/KNIFE CRANK ROD ASSY, O	
1-1	018401622	2	ｱﾅﾎﾞﾙﾄ4X16	BOLT, SOCKET M4X16	
1-2-1	017061612	1	ﾎﾞﾙﾄ6X16	BOLT, M6X16	
1-2-2	118735002	1	ｻﾞｶﾞﾈ	WASHER, PLAIN	
1-3	S23342001	1	ｱﾅﾄｶﾞﾘ4X5	SET SCREW, SOCKET (CN) M4X5	
2	S20571101	1	ｳﾜﾒｽｻﾄﾞｳｳﾃﾞ	UPPER KNIFE DIFFERENTIAL ARM	
3	155247000	1	ﾀﾞｽﾄｼｰﾙ	DUST SEAL	
4	S39704021	1	ｳﾜﾒｽﾒﾀﾙL	UPPER KNIFE BUSH, L	
5	S39677021	1	ﾒﾀﾙ11.11-17	BUSH, 11.11-17	
6	S43527001	1	ｾｯﾄｶﾗｰｸﾐ	SET SCREW COLLAR ASSY	
6-1	012060632	2	ｱﾅﾋﾗ6X6	SET SCREW, SOCKET (FT) M6X6	
8	S20574001	1	ｳﾜﾒｽﾀﾞｷﾅｯﾄ	NUT	
			<上メス用>	<For Upper Knife>	
9-1	S20575001	1	ｳﾜﾒｽﾀﾞｷ	UPPER KNIFE HOLDER	
			<角メス用>	<For Angle Knife>	
9-2	S20576001	1	ｳﾜﾒｽﾀﾞｷ	UPPER KNIFE HOLDER	
			<上メス用>	<For Upper Knife>	
10-1	062401212	1	ﾅﾍﾞｺ4X12	SCREW, PAN M4X12	
			<角メス用>	<For Angle Knife>	
10-2	062401612	1	ﾅﾍﾞｺM4X16	SCREW, PAN M4X16	
			<上メス用>	<For Upper Knife>	
11	025040132	1	ﾋﾗｻﾞｶﾞﾈｼｮｳ4	WASHER, PLAIN S 4	
			<角メス用>	<For Angle Knife>	
12	S20577001	1	ｳﾜﾒｽｵｻｴ	UPPER KNIFE PRESSER	
13	S20578101	1	ｳﾜﾒｽｵｻｴｲﾀ	UPPER KNIFE PRESSER PLATE	
14	025030132	1	ﾋﾗｻﾞｶﾞﾈｼｮｳ3	WASHER, PLAIN S 3	
			<上メス用>	<For Upper Knife>	
15-1	144074350	1	ｳﾜﾒｽ	UPPER KNIFE	
16-1	S23621101	1	ﾎﾞﾙﾄ35X8	BOLT, M3.5X8	
			<角メス用>	<For Angle Knife>	
15-2	*	1	ｶｸﾒｽ	ANGLE KNIFE, NARROW	
16-2	062300412	1	ﾅﾍﾞｺ3X4	SCREW, PAN M3X4	
17	S39706001	1	ｼﾀﾒｽﾄﾘﾂｹﾀﾞｲ	LOWER KNIFE HOLDER	
18	062060812	1	ﾅﾍﾞｺ6X8	SCREW, PAN M6X8	
19	S39707001	1	ｼﾀﾒｽﾄﾘﾂｹﾀﾞｲｱﾝﾅｲ	LOWER KNIFE HOLDER GUIDE	
21	062060812	2	ﾅﾍﾞｺ6X8	SCREW, PAN M6X8	
22	*	1	ｼﾀﾒｽ	LOWER KNIFE, T=1.5	
25	S39708001	1	ｼﾀﾒｽｵｻｴ	LOWER KNIFE PRESSER	
26	017500812	1	ﾎﾞﾙﾄ5X8	BOLT, M5X8	
27	S20585001	1	ｼﾀﾒｽﾄﾘﾂｹﾀﾞｲﾊﾞﾈ	SPRING, COMPRESSION	
28	S39709021	1	ｼﾀﾒｽﾊﾞﾈｳｹ	SPRING HOLDER	
29	060400812	1	ﾊﾞｲﾝﾄﾞM4X8	SCREW, BIND M4X8	
			"ｵﾌﾟｼｮﾝ部品"	"OPTION PARTS"	
15-2	S20896101	1	ｶｸﾒｽ <幅狭>	ANGLE KNIFE, NARROW	
15-2	S20897101	1	ｶｸﾒｽ <幅狭 波刃>	ANGLE KNIFE, NARROW WAVE EDGE	
15-2	S20579101	1	ｶｸﾒｽ <幅広>	ANGLE KNIFE, WIDE	
15-2	S20898101	1	ｶｸﾒｽ <幅広 波刃>	ANGLE KNIFE, WIDE WAVE EDGE	

J．バックタック関係 / Back-tacking

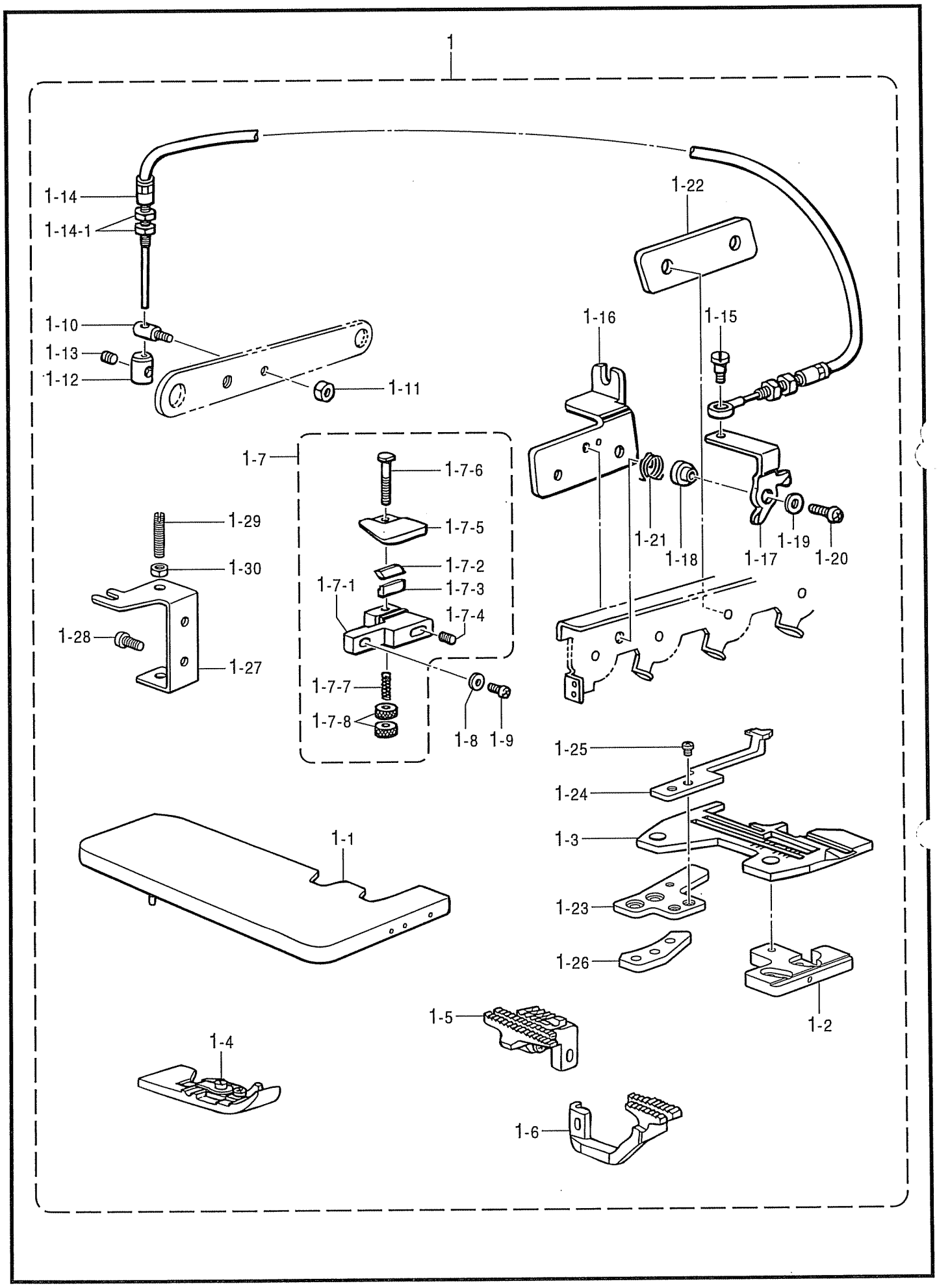

878-N21-237

J. バックタック関係 / Back-tacking

REF.NO	CODE	Q'TY	ヒンメイ	NAME OF PARTS	RM
			<W820-25>		
1	S43563001	1	ﾊﾞｯｸﾀｯｸｿｳﾁｾｯﾄ	BACK LATCH DEVICE	
			<W820-26>		
1	S43563002	1	ﾊﾞｯｸﾀｯｸｿｳﾁｾｯﾄ	BACK LATCH DEVICE	
1-1	S39618001	1	ｸﾛｽﾌﾟﾚｰﾄ	CLOTH PLATE	
1-2	S39651051	1	ﾊﾘｲﾀｻｻｴｲﾀF	NEEDLE PLATE SUPPORT, F	
1-3	*	1	ﾊﾘｲﾀ	NEEDLE PLATE	
1-4	*	1	ｵｻｴｸﾐ	PRESSER FOOT ASSY	
1-5	S25007001	1	ｼｭｵｸﾘﾊﾞｸﾐ	MAIN FEED DOG ASSY	
1-6	S25010001	1	ｻﾄﾞｳｵｸﾘﾊﾞ	DIFFERENTIAL FEED DOG	
1-7	S21335001	1	ｶｴｼﾇｲｵｻｴｸﾐ	BACK LATCH PRESSER ASSY	
1-7-1	S21320001	1	ｶｴｼﾇｲﾄﾞﾀﾞｲ	BACK LATCH BLADE HOLDER	
1-7-2	S09234001	1	ｶｴｼﾇｲﾒｽ	BACK LATCH KNIFE	
1-7-3	S09235001	1	ｶｴｼﾇｲﾒｽｵｻｴ	BACK LATCH KNIFE PRESSER	
1-7-4	012400832	2	ｱﾅﾋﾗ4X8	SET SCREW, SOCKET (FT) M4X8	
1-7-5	S21321001	1	ｶｴｼﾇｲｵｻｴｲﾀ	PRESSER PLATE, ;B/LATCH	
1-7-6	S21322001	1	ｵｻｴｲﾀｵｼﾎﾞｳ	PUSH BAR	
1-7-7	116794001	1	ｵｼﾊﾞﾈ	SPRING, COMPRESSION	
1-7-8	S21324001	2	ｵｻｴｲﾀﾁｮｳｾﾂﾅｯﾄ	ADJUSTING NUT, ;P/PLATE	
1-8	025040132	1	ﾋﾗｻﾞｶﾞﾈｼﾖｳ4	WASHER, PLAIN S 4	
1-9	060401012	1	ﾊﾞｲﾝﾄﾞM4X10	SCREW, BIND M4X10	
1-10	S21315001	1	ｽﾀｯﾄﾞM4	STUD, M4	
1-11	021400212	1	2ｼﾕﾅｯﾄ4	NUT, 2 M4	
1-12	S21316001	1	ﾜｲﾔｰｽﾄｯﾊﾟｰ	WIRE STOPPER	
1-13	012400432	1	ｱﾅﾋﾗ4X4	SET SCREW, SOCKET (FT) M4X4	
1-14	S21314001	1	ﾌﾚｷｼﾌﾞﾙﾜｲﾔｰｸﾐ	FLEXIBLE WIRE ASSY	
1-14-1	021500303	4	ﾅｯﾄ3ｼﾕ5	NUT, 3 M5	
1-15	S23774001	1	ﾀﾞﾝﾈｼﾞ3.5	SHOULDER SCREW, M3.5	
1-16	S39797001	1	ｲﾄﾕﾙﾒﾄﾞﾀﾞｲ	TENSION RELEASE BASE	
1-17	S39798001	1	ｲﾄﾕﾙﾒｲﾀ	TENSION RELEASE PLATE	
1-18	S39799001	1	ｶﾗｰ	COLLAR	
1-19	025040232	1	ﾋﾗｻﾞｶﾞﾈﾁﾕｳ4	WASHER, PLAIN M 4	
1-20	062401212	1	ﾅﾍﾞｺ4X12	SCREW, PAN M4X12	
1-21	S39800001	1	ｲﾄﾕﾙﾒﾓﾄﾞｼﾊﾞﾈ	SPRING	
1-22	S39796001	1	ｽﾍﾟｰｻ	SPACER	
1-23	S39768001	1	ﾊﾘｲﾀｻｻｴｲﾀB	NEEDLE PLATE SUPPORT, B	
1-24	S21326001	1	ｲﾄｻﾊﾞｷ	LOWER THREAD FINGER	
1-25	062300512	1	ﾅﾍﾞｺ3X5	SCREW, PAN M3X5	
1-26	S39767021	1	ﾊﾘｲﾀｻｻｴｲﾀBｻｻｴ	PLATE, B SUPPORT	
1-27	S23349001	1	ﾚﾊﾞｰﾁｮｳｾﾂｲﾀ	LEVER ADJUSTING PLATE	
1-28	060400812	2	ﾊﾞｲﾝﾄﾞM4X8	SCREW, BIND M4X8	
1-29	011502012	2	ﾄﾒﾈｼﾞ5X20ﾋﾗ	SET SCREW, (FT)M5X20	
1-30	021500312	2	3ｼﾕﾅｯﾄ5	NUT, 3 M5	

K . 上ルーパ関係/ Over looper mechanism

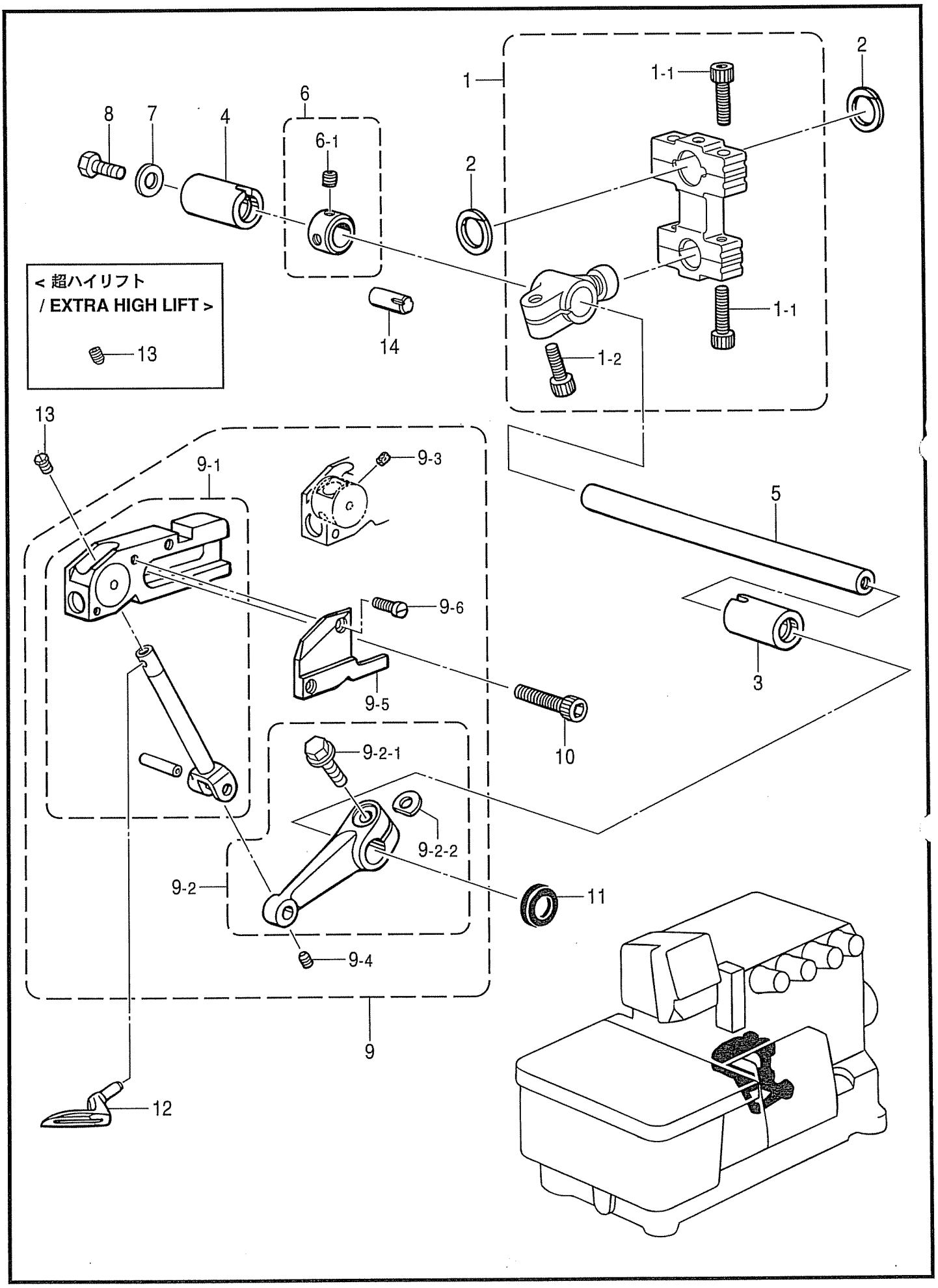

878-N21-307

K. 上ルーパー関係 / Over looper mechanism

REF.NO	CODE	Q'TY	ヒンメイ	NAME OF PARTS	RM
1	S54015001	1	ｳﾜﾙｰﾊﾟﾛｯﾄﾞｸﾐHE	OVER LOOPER CON. ROD ASSY, HE	
1-1	018401622	4	ｱﾅﾎﾞﾙﾄ4X16	BOLT, SOCKET M4X16	
1-2	S23346101	1	ｱﾅﾎﾙﾄ6X14ﾎｿﾒ	BOLT, SOCKET M6X14	
2	S20598000	2	ﾛｯﾄﾞﾌﾚﾄﾞﾒ	ROD STOPPER	
3	S39728021	1	ﾒﾀﾙ11.11-18	BUSH, 11.11-18	
4	S39677021	1	ﾒﾀﾙ11.11-17	BUSH, 11.11-17	
5	S20601001	1	ｳﾜﾙｰﾊﾟｼﾞｸ	OVER LOOPER SHAFT	
6	S43527001	1	ｾｯﾄｶﾗｰｸﾐ	SET SCREW COLLAR ASSY	
6-1	012060632	2	ｱﾅﾋﾗ6X6	SET SCREW, SOCKET (FT) M6X6	
7	S23626001	1	ｻﾞｶﾞﾈ	WASHER	
8	017060812	1	ﾎﾞﾙﾄ6X8	BOLT, M6X8	
			＜ﾊｲﾘﾌﾄ用＞	<For High lift>	
9	S52053001	1	ｳﾜﾙｰﾊﾟｷｺｳｿｳｸﾐSH	OVER LOOPER SET, SH	
9-1	S52054001	1	ｳﾜﾙｰﾊﾟｷｺｳｸﾐ	OVER LOOPER ASSY	
9-2	S52060001	1	ｳﾜﾙｰﾊﾟｳﾃﾞSHｸﾐ	OVER LOOPER ARM ASSY, SH	
13	S46903001	1	ｱﾅﾏﾂｷﾄﾒﾈｼﾞ4X5	SET SCREW, M4X5	
			＜超ﾊｲﾘﾌﾄ用＞	<For Extra high lift>	
9	S52062001	1	ｳﾜﾙｰﾊﾟｷｺｳｿｳｸﾐE	OVER LOOPER SET, E	
9-1	S52054001	1	ｳﾜﾙｰﾊﾟｷｺｳｸﾐ	OVER LOOPER ASSY	
9-2	S52063001	1	ｳﾜﾙｰﾊﾟｳﾃﾞEｸﾐ	OVER LOOPER ARM ASSY, E	
13	012400432	1	ｱﾅﾋﾗ4X4	SET SCREW, SOCKET (FT) M4X4	
9-2-1	S46899001	1	ｻﾞｶﾞﾈﾂｷﾎﾞﾙﾄ6X16	BOLT, (W/WASHER) M6X16	
9-2-2	155162001	1	ｽﾍﾟｰｻ	SPACER	
9-3	S29700000	2	ｳﾜﾙｰﾊﾟｱﾝﾅｲﾌｴﾙﾄ	FELT	
9-4	S23342001	1	ｱﾅﾄｶﾞﾘ4X5	SET SCREW, SOCKET (CN) M4X5	
9-5	S52059001	1	ｳﾜﾙｰﾊﾟｱﾝﾅｲｵｻｴ	OVER LOOPER GUIDE SUPPORT	
9-6	S20355002	2	ｼﾒﾈｼﾞ3X8.5	SCREW, M3X8.5	
10	018061432	2	ｱﾅﾎﾞﾙﾄ6X14	BOLT, SOCKET M6X14	
11	155247000	1	ﾀﾞｽﾄｼｰﾙ	DUST SEAL	
12	*	1	ｳﾜﾙｰﾊﾟ	OVER LOOPER, B	
14	118550001	1	ﾐｿﾞﾂｷﾋﾟﾝ	PIN, DOWEL	

L . 下ルーパ関係 / Under looper mechanism

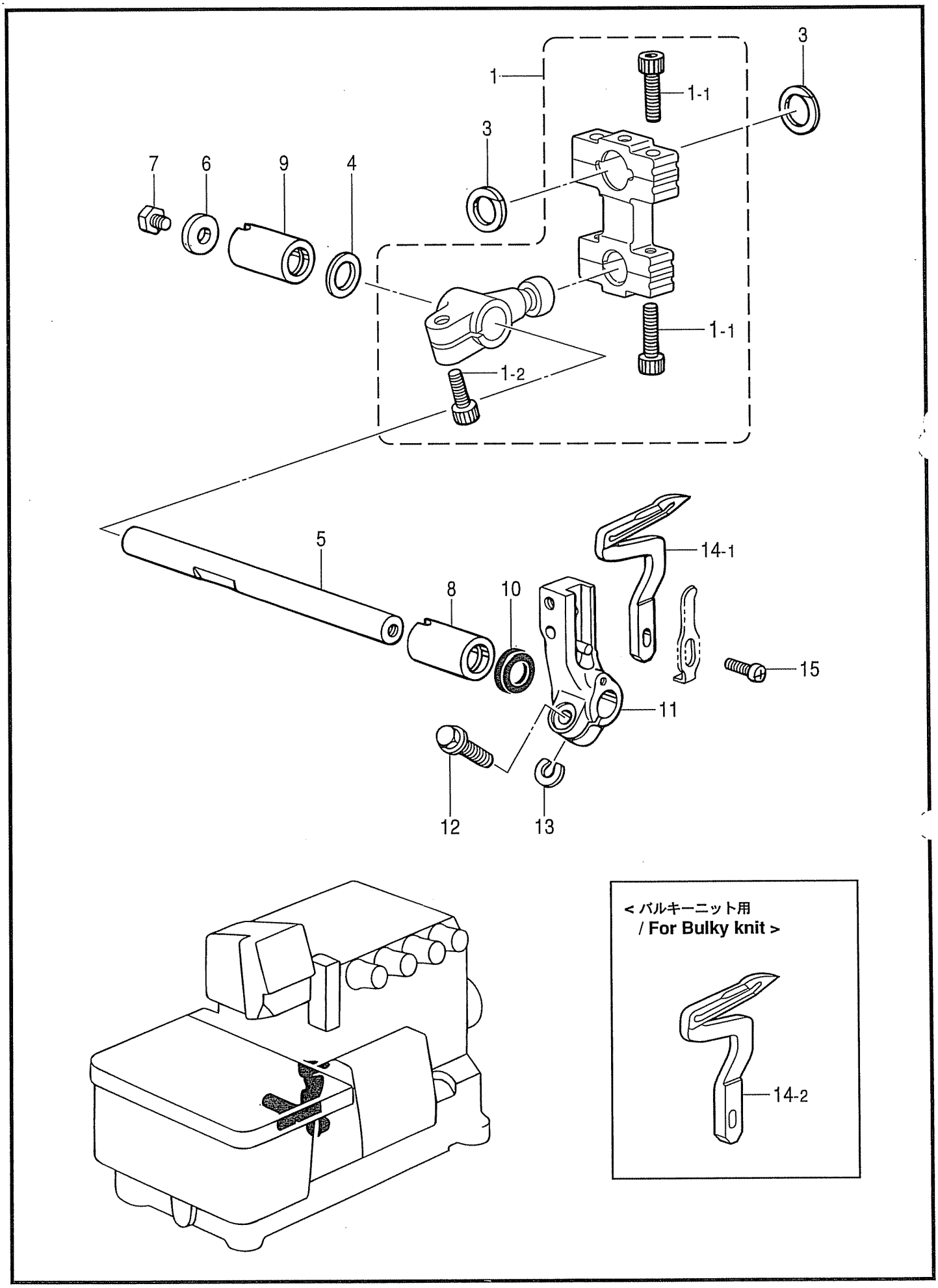

878-N21-308

L. 下ルーパー関係 / Under looper mechanism

REF.NO	CODE	Q'TY	ヒンメイ	NAME OF PARTS	RM
			＜ﾊｲﾘﾌﾄ用＞	<For High lift>	
1	S54016001	1	ｼﾀﾙｰﾊﾟﾛｯﾄﾞｸﾐOSH	U/LOOPER CON. ROD ASSY, OSH	
1-1	018401622	4	ｱﾅﾎﾞﾙﾄ4X16	BOLT, SOCKET M4X16	
1-2	S23346101	1	ｱﾅﾎﾙﾄ6X14ﾎｿﾒ	BOLT, SOCKET M6X14	
			＜超ﾊｲﾘﾌﾄ用＞	<For Extra high lift>	
1	S54017001	1	ｼﾀﾙｰﾊﾟﾛｯﾄﾞｸﾐOE	U/LOOPER CON. ROD ASSY, OE	
1-1	018401622	4	ｱﾅﾎﾞﾙﾄ4X16	BOLT, SOCKET M4X16	
1-2	S23346101	1	ｱﾅﾎﾙﾄ6X14ﾎｿﾒ	BOLT, SOCKET M6X14	
3	S20598000	2	ﾛｯﾄﾞﾌﾚﾄﾞﾒ	ROD STOPPER	
4	S20621001	1	ｶﾗｰ	COLLAR	
5	S46904001	1	ｼﾀﾙｰﾊﾟｼﾞｸ	UNDER LOOPER SHAFT	
6	S23626001	1	ｻﾞｶﾞﾈ	WASHER	
7	017060812	1	ﾎﾞﾙﾄ6X8	BOLT, M6X8	
8	S39728021	1	ﾒﾀﾙ11.11-18	BUSH, 11.11-18	
9	S39677021	1	ﾒﾀﾙ11.11-17	BUSH, 11.11-17	
10	155247000	1	ﾀﾞｽﾄｼｰﾙ	DUST SEAL	
11	S20625151	1	ｼﾀﾙｰﾊﾟﾄﾘﾂｹﾀﾞｲ	UNDER LOOPER HOLDER	
12	S23614101	1	ﾌﾗﾝｼﾞﾎﾞﾙﾄ5X14	BOLT, M5X14	
13	148782001	1	ｽﾍﾟｰｻ	SPACER	
14-1	S20627001	1	ｼﾀﾙｰﾊﾟ	UNDER LOOPER	
			＜ﾊﾞﾙｷｰﾆｯﾄ用＞	<For Bulky knit>	
14-2	S40866001	1	ｼﾀﾙｰﾊﾟ	UNDER LOOPER	
15	060351012	1	ﾊﾞｲﾝﾄﾞ3.5X10	SCREW, BIND M3.5X10	

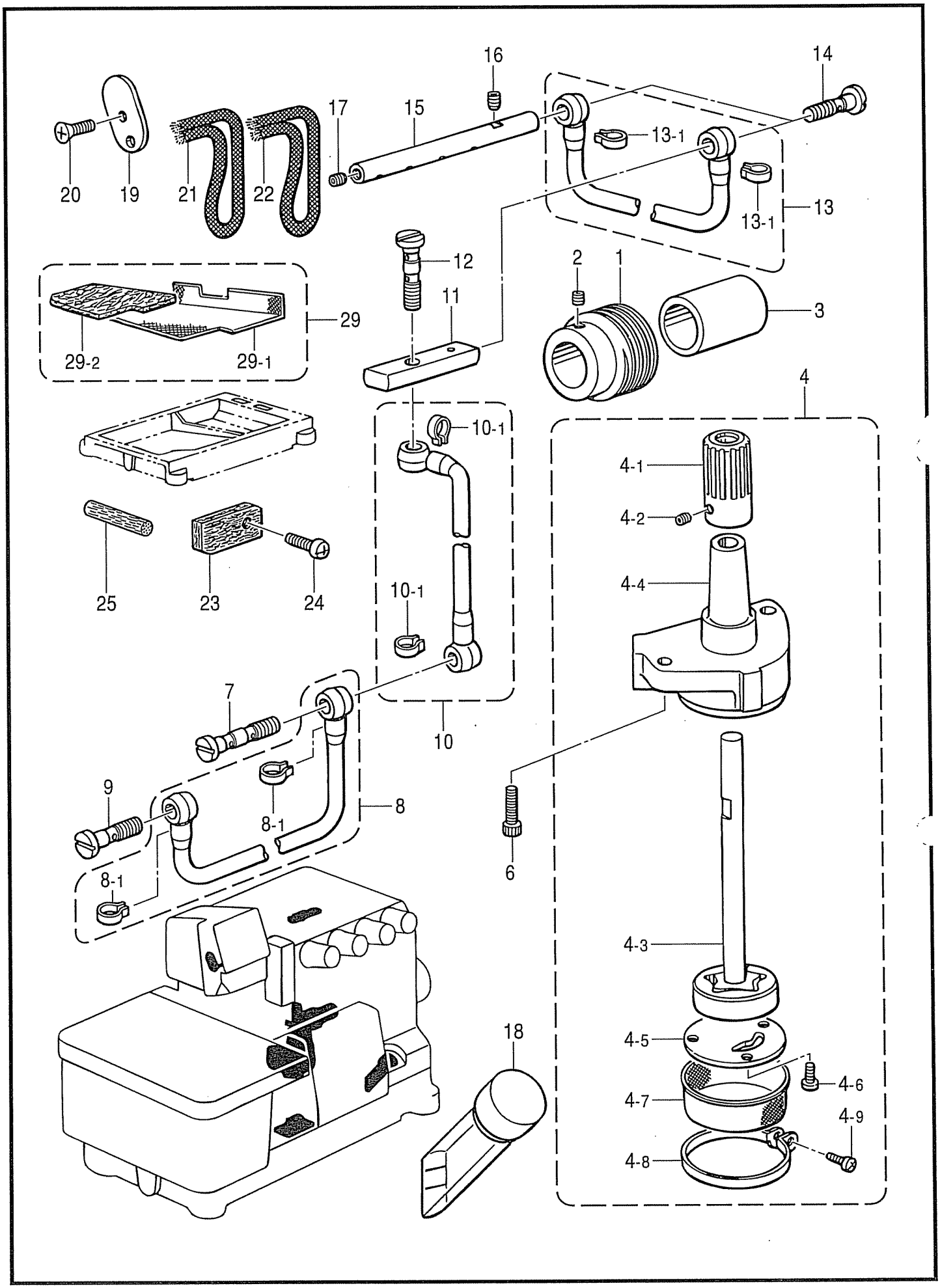
16
14
17
15
13-1
20
19
21
22
13-1
13
12
2
1
11
3
29
29-2
29-1
4
10-1
4-1
4-2
4-4
25
23
24
10-1
10
7
9
8
8-1
6
8-1
4-3
18
4-5
4-6
4-7
4-9
4-8

878-N21-350

M. 給油潤滑関係 / Lubrication

REF.NO	CODE	Q'TY	ヒンメイ	NAME OF PARTS	RM
1	S20655101	1	ｳｵｰﾑ	WORM	
2	012500532	2	ｱﾅﾋﾗ5X5	SET SCREW, SOCKET (FT) M5X5	
3	S39743001	1	ｶﾗｰ	COLLAR	
4	S39597001	1	ﾄﾛｺｲﾄﾞﾎﾟﾝﾌﾟｸﾐ	PUMP ASSY	
4-1	S20657001	1	ｳｵｰﾑﾎｲｰﾙ	WORM WHEEL	
4-2	012400432	2	ｱﾅﾋﾗ4X4	SET SCREW, SOCKET (FT) M4X4	
4-3	S39599001	1	ﾎﾟﾝﾌﾟﾛｰﾀｰｸﾐ	PUMP INNER ROTER ASSY	
4-4	S39598000	1	ﾎﾟﾝﾌﾟｹｰｽ	PUMP CASE	
4-5	S39601000	1	ﾎﾟﾝﾌﾟﾀｲﾌﾀ	PUMP BODY COVER	
4-6	062400812	3	ﾅﾍﾞｺ4X8	SCREW, PAN M4X8	
4-7	S39602000	1	ﾛｶﾓｳ	OIL FILTER	
4-8	S39603001	1	ﾛｶﾓｳｵｻｴ	OIL FILTER FLANGE	
4-9	062401212	1	ﾅﾍﾞｺ4X12	SCREW, PAN M4X12	
6	018061432	2	ｱﾅﾎﾞﾙﾄ6X14	BOLT, SOCKET M6X14	
7	S39744021	1	ﾊｲﾕﾊﾟｲﾌﾟﾂｷﾞﾃ	OIL PIPE JOINT	
8	S39745001	1	ﾋﾞﾆﾙﾁｭｰﾌﾞｸﾐ	OIL TUBE ASSY	
8-1	147942001	2	ﾋﾞﾆﾙﾁｭｰﾌﾞﾄﾒｶﾞﾈ	STOP RING	
9	S20199001	1	ﾊｲﾕﾊﾟｲﾌﾟﾂｷﾞﾃ	OIL PIPE JOINT	
10	S39747001	1	ﾋﾞﾆﾙﾁｭｰﾌﾞｸﾐ	OIL TUBE ASSY	
10-1	147942001	2	ﾋﾞﾆﾙﾁｭｰﾌﾞﾄﾒｶﾞﾈ	STOP RING	
11	S39751021	1	ｷｭｳﾕﾊﾟｲﾌﾟ	OIL PIPE	
12	S39744021	1	ﾊｲﾕﾊﾟｲﾌﾟﾂｷﾞﾃ	OIL PIPE JOINT	
13	S39749001	1	ﾋﾞﾆﾙﾁｭｰﾌﾞｸﾐ	OIL PIPE ASSY	
13-1	147942001	2	ﾋﾞﾆﾙﾁｭｰﾌﾞﾄﾒｶﾞﾈ	STOP RING	
14	S20199001	2	ﾊｲﾕﾊﾟｲﾌﾟﾂｷﾞﾃ	OIL PIPE JOINT	
15	S39752021	1	ﾛﾝﾄﾞｷｭｳﾕﾊﾟｲﾌﾟ	OIL PIPE	
16	012400432	1	ｱﾅﾋﾗ4X4	SET SCREW, SOCKET (FT) M4X4	
17	012060632	1	ｱﾅﾋﾗ6X6	SET SCREW, SOCKET (FT) M6X6	
18	148084001	1	ｵｲﾙｹﾞｰｼﾞﾏﾄﾞ	OIL GAUGE WINDOW	
19	S20668200	1	ﾊﾘﾎﾞｳﾘﾝｸﾌｪﾙﾄ	FELT, ;N-BAR LINK	
20	061400812	1	ｻﾗｺM4X8	SCREW, FLAT M4X8	
21	S49337000	1	ｸﾐﾋﾓ70	WICK, L=70	
22	S20671000	1	ｸﾐﾋﾓ100	WICK, L=100	
23	S20669000	1	ﾌｪﾙﾄ	FELT	
24	060400812	1	ﾊﾞｲﾝﾄﾞM4X8	SCREW, BIND M4X8	
25	S20392000	1	ﾌｪﾙﾄ	FELT	
29	S43523000	1	ﾌｨﾙﾀｰｸﾐ	FILTER ASSY	
29-1	S43521000	1	ﾛｶﾓｳD	FILTER, D	
29-2	S43522000	1	ｵｲﾙﾌｨﾙﾀｰ	OIL FILTER	

N .糸調子関係 / Thread tension

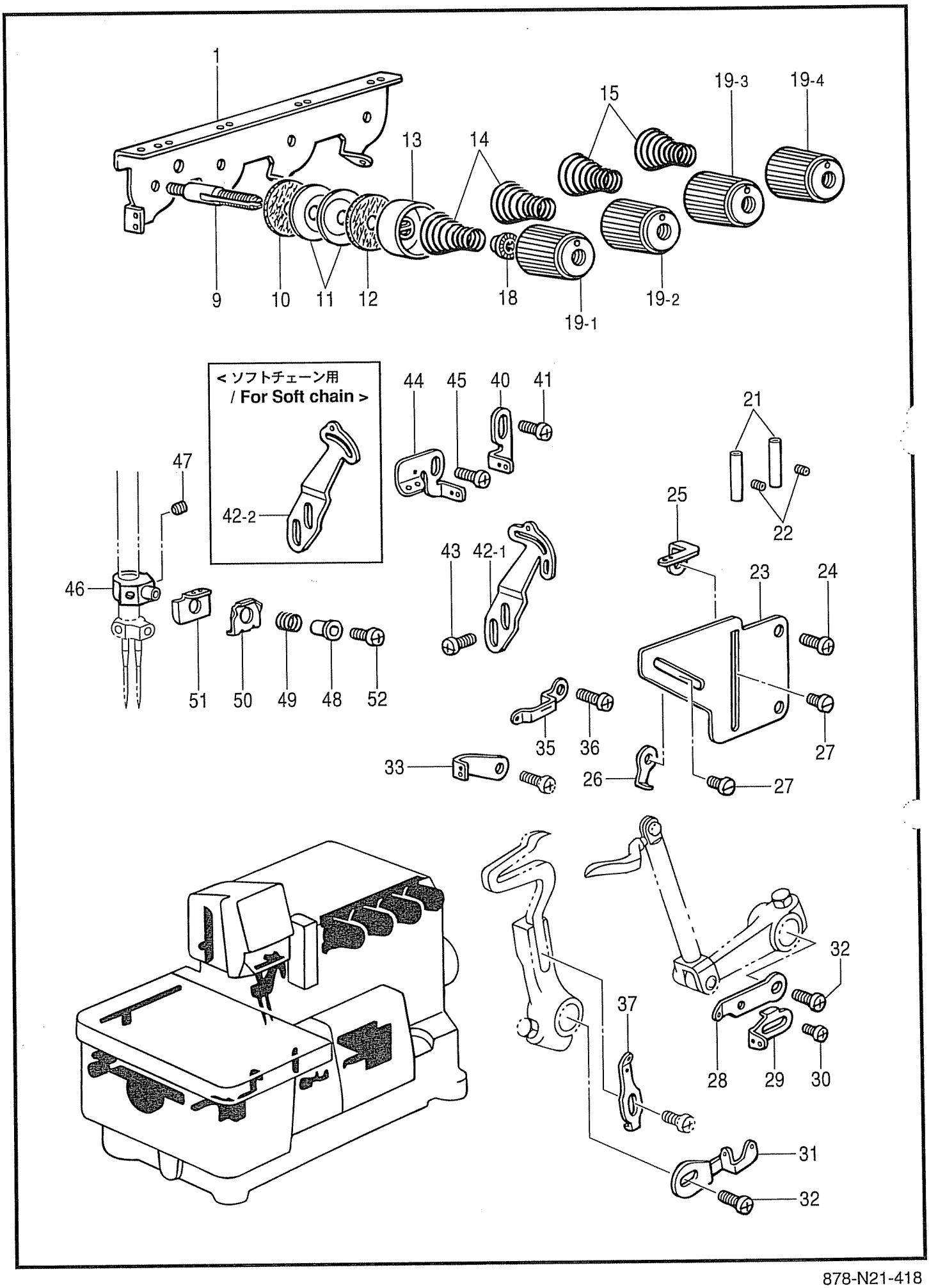

878-N21-418

N. 糸調子関係 / Thread tension

REF.NO	CODE	Q'TY	ヒンメイ	NAME OF PARTS	RM
1	S38328051	1	ｼｭｲﾄｱﾝﾅｲ	MAIN THREAD GUIDE	
9	S20676051	4	ｲﾄﾁｮｳｼﾎﾞｳ	TENSION STUD	
10	S20677000	4	ｲﾄﾁｮｳｼｻﾗﾌｪﾙﾄ	FELT, T-DISC	
11	S20673001	8	ｲﾄﾁｮｳｼｻﾗ	TENSION DISC	
12	110832009	4	ｲﾄﾁｮｳｼｻﾗﾌｪﾙﾄ	FELT, ;T-DISC	
13	144103009	4	ｲﾄﾁｮｳｼｻﾗｵｻｴ	DISC PRESSER, ;TENSION	
14	S20678001	2	ｲﾄﾁｮｳｼﾊﾞﾈL	TENSION SPRING, L	
15	S20679001	2	ｲﾄﾁｮｳｼﾊﾞﾈM	TENSION SPRING, M	
18	S20681000	4	ﾁｮｳｼﾊﾞﾈｳｴｻﾞｶﾞﾈ	WASHER	
19-1	S20682103	1	ｲﾄﾁｮｳｼﾅｯﾄ <赤>	TENSION NUT, RED	
19-2	S20682101	1	ｲﾄﾁｮｳｼﾅｯﾄ <水色>	TENSION NUT, LIGHT BLUE	
19-3	S20682104	1	ｲﾄﾁｮｳｼﾅｯﾄ <黄>	TENSION NUT, YELLOW	
19-4	S20682102	1	ｲﾄﾁｮｳｼﾅｯﾄ <緑>	TENSION NUT, GREEN	
21	146592001	2	ｲﾄｱﾝﾅｲﾊﾟｲﾌﾟ	THREAD GUIDE PIPE	
22	S23452002	2	ｱﾅﾋﾗ4X3.2	SET SCREW, SOCKET (FT) M4X3.2	
23	S20684101	1	ｲﾄｱﾝﾅｲﾄﾞﾀﾞｲ	THREAD GUIDE BRACKET	
24	060400612	2	ﾊﾞｲﾝﾄﾞM4X6	SCREW, BIND M4X6	
25	S20685001	1	ｼﾀﾙｰﾊﾟｲﾄｱﾝﾅｲR	UNDER LOOPER THREAD GUIDE, R	
26	S20686001	1	ｳﾜﾙｰﾊﾟｲﾄｱﾝﾅｲR	OVER LOOPER THREAD GUIDE, R	
27	S23418002	2	ｼﾒﾈｼﾞ4X5	SCREW, M4X5	
28	S21133001	1	ｳﾜﾙｰﾊﾟﾃﾝﾋﾞﾝR	OVER LOOPER THREAD TAKE-UP, R	
29	S21134001	1	ｼﾀﾙｰﾊﾟﾃﾝﾋﾞﾝR	UNDER LOOPER THREAD TAKE-UP,R	
30	060300412	1	ﾊﾞｲﾝﾄﾞM3X4	SCREW, BIND M3X4	
31	S21135001	1	ﾙｰﾊﾟﾃﾝﾋﾞﾝL	LOOPER THREAD TAKE-UP, L	
32	060400612	2	ﾊﾞｲﾝﾄﾞM4X6	SCREW, BIND M4X6	
33	S21137001	1	ﾙｰﾊﾟｲﾄｱﾝﾅｲM1	LOOPER THREAD GUIDE, M1	
35	S21136101	1	ｳﾜﾙｰﾊﾟｲﾄｱﾝﾅｲL	OVER LOOPER THREAD GUIDE, L	
36	060400612	1	ﾊﾞｲﾝﾄﾞM4X6	SCREW, BIND M4X6	
37	S20687001	1	ｼﾀﾙｰﾊﾟｲﾄｱﾝﾅｲL	UNDER LOOPER THREAD GUIDE, L	
40	S21129001	1	ﾊﾘｲﾄｱﾝﾅｲB	NEEDLE THREAD GUIDE, B	
41	060400612	1	ﾊﾞｲﾝﾄﾞM4X6	SCREW, BIND M4X6	
42-1	S21130051	1	ﾊﾘｲﾄﾃﾝﾋﾞﾝA ＜ｿﾌﾄﾁｪｰﾝ用＞	NEEDLE THREAD TAKE-UP, A <For Soft chain>	
42-2	S21132001	1	ﾊﾘｲﾄﾃﾝﾋﾞﾝC	NEEDLE THREAD TAKE-UP, C	
43	060400612	2	ﾊﾞｲﾝﾄﾞM4X6	SCREW, BIND M4X6	
44	S21128001	1	ﾊﾘｲﾄｱﾝﾅｲA	NEEDLE THREAD GUIDE, A	
45	060400612	1	ﾊﾞｲﾝﾄﾞM4X6	SCREW, BIND M4X6	
46	S38330050	1	ﾊﾘｲﾄｵｻｴﾎﾙﾀﾞｰ	NEEDLE THREAD PRESSER HOLDER	
47	146427001	2	ｱﾅﾄﾒﾈｼﾞ3.18ｸﾎﾞﾐ	SET SCREW, SOCKET (CP) SM3.18	
48	S20689001	1	ﾊﾘｲﾄｵｻｴｶﾗｰ	NEEDLE THREAD PRESSER COLLAR	
49	S20690001	1	ﾊﾘｲﾄｵｻｴﾊﾞﾈ	SPRING, COMPRESSION	
50	S20691001	1	ﾊﾘｲﾄｵｻｴｲﾀ	NEEDLE THREAD PRESSER PLATE	
51	S20692001	1	ﾊﾘｲﾄｱﾝﾅｲ	NEEDLE THREAD GUIDE	
52	060300612	1	ﾊﾞｲﾝﾄﾞ M3X6	SCREW, BIND M3X6	

P1．ラフラー装置関係 / Ruffling attachment

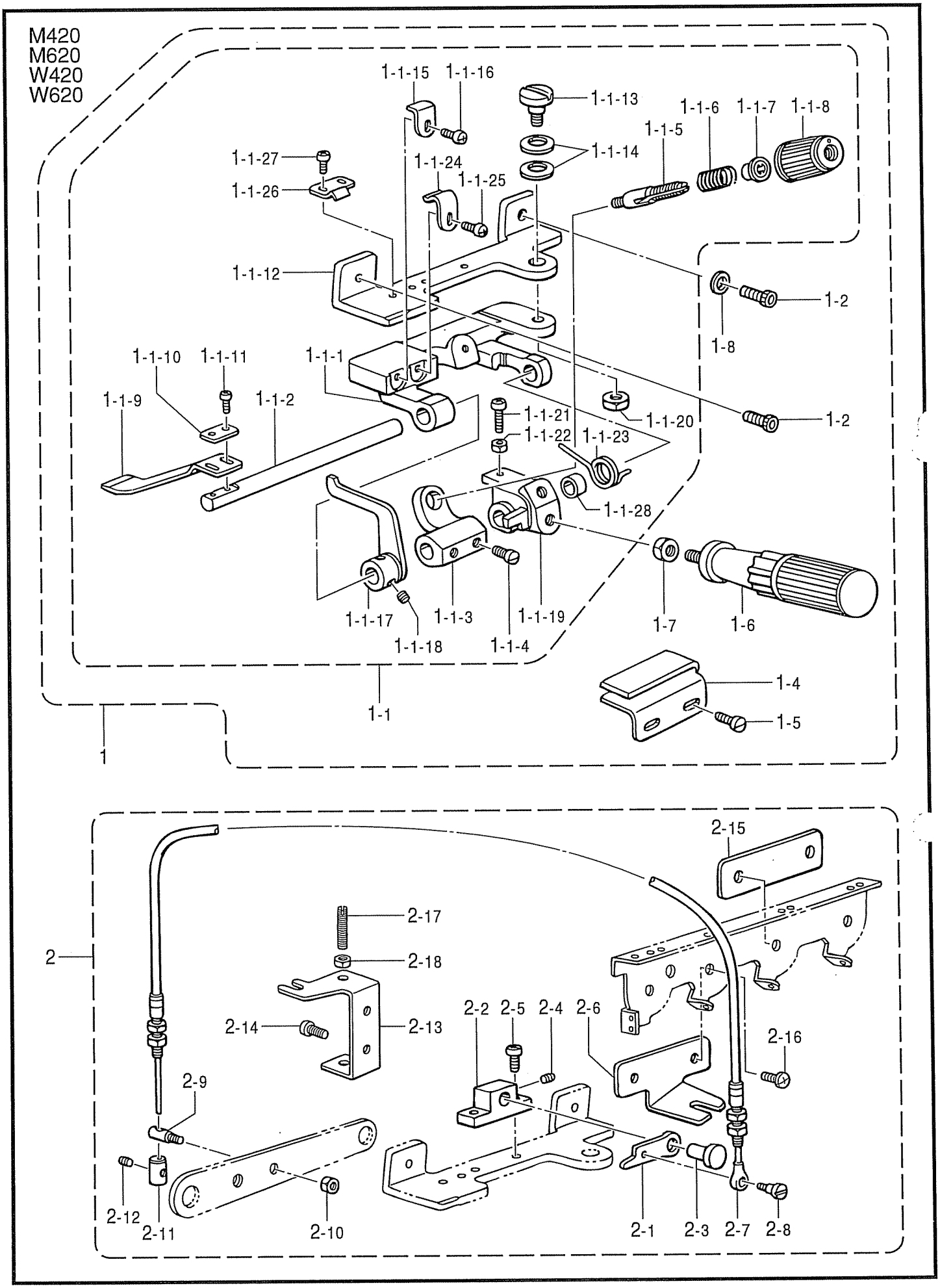

878-N21-940

P1. ラフラー装置関係 / Ruffling attachment

REF.NO	CODE	Q'TY	ヒンメイ	NAME OF PARTS	RM
1	S30134001	1	ﾗﾌﾗｰｸﾐ	RUFFLER ASSY	
1-1	S25006001	1	ﾗﾌﾗｰｿｳﾁｸﾐ	RUFFLER DEVICE SET	
1-1-1	S21294001	1	ｷｼﾞｵｻｴﾀｲ	RUFFLING BLADE BRACKET	
1-1-2	S21295001	1	ｷｼﾞｵｻｴﾄﾘﾂｹｼﾞｸ	RUFFLING BLADE BASE SHAFT	
1-1-3	S21305001	1	ﾊﾞﾈｳｹ	SPRING BASE	
1-1-4	S23777101	2	ｱﾀﾏﾂｷﾄﾒﾈｼﾞ6	SET SCREW, M6	
1-1-5	S20676051	1	ｲﾄﾁｮｳｼﾎﾞｳ	TENSION STUD	
1-1-6	S23775001	1	ｺｲﾙﾊﾞﾈ	SPRING, COIL	
1-1-7	S20681000	1	ﾁｮｳｼﾊﾞﾈｳｴｻﾞｶﾞﾈ	WASHER	
1-1-8	S20682105	1	ｲﾄﾁｮｳｼﾅﾂﾄ	TENSION NUT	
1-1-9	S25005001	1	ｷｼﾞｵｻｴ	RUFFLING BLADE	
1-1-10	144784001	1	ｷｼﾞｵｻｴｻﾞｶﾞﾈ	WASHER	
1-1-11	062300812	2	ﾅﾍﾞｺ3X8	SCREW, PAN M3X8	
1-1-12	S21297001	1	ﾗﾌﾗｰｿｳﾁﾄﾘﾂｹﾀﾞｲ	RUFFLER BASE	
1-1-13	S21306001	1	ﾀﾞﾝﾈｼﾞ6	SHOULDER SCREW, M6	
1-1-14	S21307001	2	ﾊﾞﾈｻﾞｶﾞﾈ	WASHER, SPRING	
1-1-15	S21298001	1	ｷｼﾞｵｻｴｱﾝﾅｲ	RUFFLING BLADE GUIDE	
1-1-16	062400812	1	ﾅﾍﾞｺ4X8	SCREW, PAN M4X8	
1-1-17	S21299001	1	ｷｼﾞｵｻｴｱｹﾞ	CLOTH PRESSER BAR LIFTER	
1-1-18	S23651002	2	ｱﾅﾋﾗ6X6ﾎｿﾒ	SET SCREW, SOCKET (FT) M6X5	
1-1-19	S21300001	1	ﾊﾝﾄﾞﾙﾄﾘﾂｹｲﾀ	HANDLE SETTING PLATE	
1-1-20	021060302	1	ﾅﾂﾄ3ｼｭ6	NUT, 3 M6	
1-1-21	062401612	1	ﾅﾍﾞｺM4X16	SCREW, PAN M4X16	
1-1-22	021400212	1	2ｼｭﾅﾂﾄ4	NUT, 2 M4	
1-1-23	S21301001	1	ﾊﾝﾄﾞﾙﾓﾄﾞｼﾊﾞﾈ	SPRING, TWIST	
1-1-24	S21302001	1	ｷｼﾞｵｻｴﾀｲﾄﾒﾊﾞﾈU	SPRING, PLATE (U)	
1-1-25	062400612	1	ﾅﾍﾞｺM4X6	SCREW, PAN M4X6	
1-1-26	S21303001	1	ｷｼﾞｵｻｴﾀｲﾄﾒﾊﾞﾈD	SPRING, PLATE (D)	
1-1-27	062350512	2	ﾅﾍﾞｺ3.5X5	SCREW, PAN M3.5X5	
1-1-28	S21304001	1	ｶﾗｰ	COLLAR	
1-2	018401222	2	ｱﾅﾎﾞﾙﾄ4X12	BOLT, SOCKET M4X12	
1-4	S21590000	1	ｷｼﾞｱﾝﾅｲ	RUFFLER GUIDE	
1-5	S23418002	2	ｼﾒﾈｼﾞ4X5	SCREW, M4X5	
1-6	S23779001	1	ﾊﾝﾄﾞﾙ	HANDLE	
1-7	021060302	1	ﾅﾂﾄ3ｼｭ6	NUT, 3 M6	
1-8	102707002	1	ｻﾞｶﾞﾈ	WASHER, PLAIN 4	
2	S43530001	1	ﾗﾌﾗｰｵｻｴﾚﾝﾄﾞｳｸﾐ	RUFFLER INTERLOCKING PARTS SET	
2-1	S21310001	1	ｷｼﾞｵｻｴｱｹﾞﾚﾊﾞｰ	CLOTH PRESSER BAR LIFTER LEVER	
2-2	S21311001	1	ｵｻｴｱｹﾞﾀﾞｲ	PRESSER BAR LIFTER BRACKET	
2-3	S21312001	1	ﾋﾟﾝ6.35	PIN, 6.35	
2-4	012060632	1	ｱﾅﾋﾗ6X6	SET SCREW, SOCKET (FT) M6X6	
2-5	062350812	2	ﾅﾍﾞｺ3.5X8	SCREW, PAN M3.5X8	
2-6	S39795001	1	ﾜｲﾔｰﾄﾘﾂｹｲﾀ	WIRE SETTING PLATE	
2-7	S21314001	1	ﾌﾚｷｼﾌﾞﾙﾜｲﾔｰｸﾐ	FLEXIBLE WIRE ASSY	
2-8	S23774001	1	ﾀﾞﾝﾈｼﾞ3.5	SHOULDER SCREW, M3.5	
2-9	S21315001	1	ｽﾀﾂﾄﾞM4	STUD, M4	
2-10	021400212	1	2ｼｭﾅﾂﾄ4	NUT, 2 M4	
2-11	S21316001	1	ﾜｲﾔｰｽﾄｯﾊﾟｰ	WIRE STOPPER	
2-12	012400432	1	ｱﾅﾋﾗ4X4	SET SCREW, SOCKET (FT) M4X4	
2-13	S23349001	1	ﾚﾊﾞｰﾁｮｳｾﾂｲﾀ	LEVER ADJUSTING PLATE	
2-14	060400812	2	ﾊﾞｲﾝﾄﾞM4X8	SCREW, BIND M4X8	
2-15	S39796001	1	ｽﾍﾟｰｻ	SPACER	
2-16	060400812	1	ﾊﾞｲﾝﾄﾞM4X8	SCREW, BIND M4X8	
2-17	011502012	2	ﾄﾒﾈｼﾞ5X20ﾋﾗ	SET SCREW, (FT) M5X20	
2-18	021500312	2	3ｼｭﾅﾂﾄ5	NUT, 3 M5	

M420
M620
W420
W620

< 半沈用 / **For Semi-submerged** >

3-1
3-1-1-13
3-1-1-2
3-1-1-9
3-1-1-12
3-1-1-13
3-1-1-11
3-1-1-12
3-1-1-3
3-1-1-1
3-1-1-10
3-1-1-5
3-1-1-4
3-1-1-6
3-1-1-7
3-1-1
3-1-4
3-1-1-8
3-1-3
3-1-2

< 全沈用 / **For Fully-submerged** >

3-2
3-2-1-13
3-2-1-10
3-2-1-9
3-2-1-12
3-2-1-12
3-2-1-11
3-2-1-13
3-2-1-3
3-2-1-1
3-2-1-2
3-2-1-5
3-2-1-4
3-2-1-6
3-2-1-7
3-2-1
3-2-4
3-2-1-8
3-2-3
3-2-2

878-N21-940

P2. ラフラー装置関係 / Ruffling attachment

REF.NO	CODE	Q'TY	ヒンメイ	NAME OF PARTS	RM
			＜半沈用＞	<For Semi-submerged>	
3-1	S30135101	1	ｻﾄﾞｳﾁﾖｳｾﾂｾｯﾄ	DIFFERENTIAL ADJUSTING SET	
3-1-1	S21373101	1	ｻﾄﾞｳﾁﾖｳｾﾂｿｳﾁｸﾐ	DIFFERENTIAL FEED ADJUSTER	
3-1-1-1	155197101	1	ﾋｻﾞｱﾃﾖｺｼﾞｸｳｹ	KNEE LIFTER SHAFT BRACKET	
3-1-1-2	S21375001	1	ﾖｺｼﾞｸ	KNEE LIFTER SHAFT	
3-1-1-3	155199101	1	ﾋｻﾞｱﾃｷﾞﾃ	BRACKET, KNEE LIFTER	
3-1-1-4	017781412	2	ﾎﾞﾙﾄ6.35X14	BOLT, SM6.35X14	
3-1-1-5	148797001	1	ﾋｻﾞｱｹﾞﾀﾃｼﾞｸS	KNEE LIFTER BAR, S	
3-1-1-6	014780622	1	ｱﾅﾄﾒﾈｼﾞ6.35ｸﾎﾞﾐ	SET SCREW, SOCKET (CP) SM6.35	
3-1-1-7	148798109	1	ﾋｻﾞｱﾃL	KNEE LIFTER PLATE, L	
3-1-1-8	017081606	1	ﾎﾞﾙﾄ8X16	BOLT, M8X16	
3-1-1-9	S21376001	1	ﾋｻﾞｱﾃﾚﾊﾞｰ	KNEE LIFTER LEVER	
3-1-1-10	017781412	2	ﾎﾞﾙﾄ6.35X14	BOLT, SM6.35X14	
3-1-1-11	S21377001	1	ﾋｻﾞｱﾃﾚﾊﾞｰﾊﾞﾈ	SPRING, TWIST	
3-1-1-12	S21378001	2	ﾖｺｼﾞｸﾄﾒｸﾞ	COLLAR	
3-1-1-13	017781412	4	ﾎﾞﾙﾄ6.35X14	BOLT, SM6.35X14	
3-1-2	S21379001	1	ﾋｻﾞｱﾃﾘﾝｸ	CONNECTING BAR	
3-1-3	021400202	2	2ｼﾕﾅﾂﾄ4	NUT, 2 M4	
3-1-4	062401012	4	ﾅﾍﾞｺM4X10	SCREW, PAN M4X10	
			＜全沈用＞	<For Fully-submerged>	
3-2	S30135102	1	ｻﾄﾞｳﾁﾖｳｾﾂｾｯﾄ	DIF.ADJUSTING SET, FULL	
3-2-1	S21380101	1	ｻﾄﾞｳﾁﾖｳｾﾂｿｳﾁｸﾐ	DIFFERENTIAL FEED ADJUSTER	
3-2-1-1	155197101	1	ﾋｻﾞｱﾃﾖｺｼﾞｸｳｹ	KNEE LIFTER SHAFT BRACKET	
3-2-1-2	S21375001	1	ﾖｺｼﾞｸ	KNEE LIFTER SHAFT	
3-2-1-3	155199101	1	ﾋｻﾞｱﾃｷﾞﾃ	BRACKET, KNEE LIFTER	
3-2-1-4	017781412	2	ﾎﾞﾙﾄ6.35X14	BOLT, SM6.35X14	
3-2-1-5	148797001	1	ﾋｻﾞｱｹﾞﾀﾃｼﾞｸS	KNEE LIFTER BAR, S	
3-2-1-6	014780622	1	ｱﾅﾄﾒﾈｼﾞ6.35ｸﾎﾞﾐ	SET SCREW, SOCKET (CP) SM6.35	
3-2-1-7	148798109	1	ﾋｻﾞｱﾃL	KNEE LIFTER PLATE, L	
3-2-1-8	017081606	1	ﾎﾞﾙﾄ8X16	BOLT, M8X16	
3-2-1-9	S21376001	1	ﾋｻﾞｱﾃﾚﾊﾞｰ	KNEE LIFTER LEVER	
3-2-1-10	017781412	2	ﾎﾞﾙﾄ6.35X14	BOLT, SM6.35X14	
3-2-1-11	S21377001	1	ﾋｻﾞｱﾃﾚﾊﾞｰﾊﾞﾈ	SPRING, TWIST	
3-2-1-12	S21378001	2	ﾖｺｼﾞｸﾄﾒｸﾞ	COLLAR	
3-2-1-13	017781412	4	ﾎﾞﾙﾄ6.35X14	BOLT, SM6.35X14	
3-2-2	S21381001	1	ﾋｻﾞｱﾃﾘﾝｸ	CONNECTING BAR	
3-2-3	021400202	2	2ｼﾕﾅﾂﾄ4	NUT, 2 M4	
3-2-4	062401012	4	ﾅﾍﾞｺM4X10	SCREW, PAN M4X10	

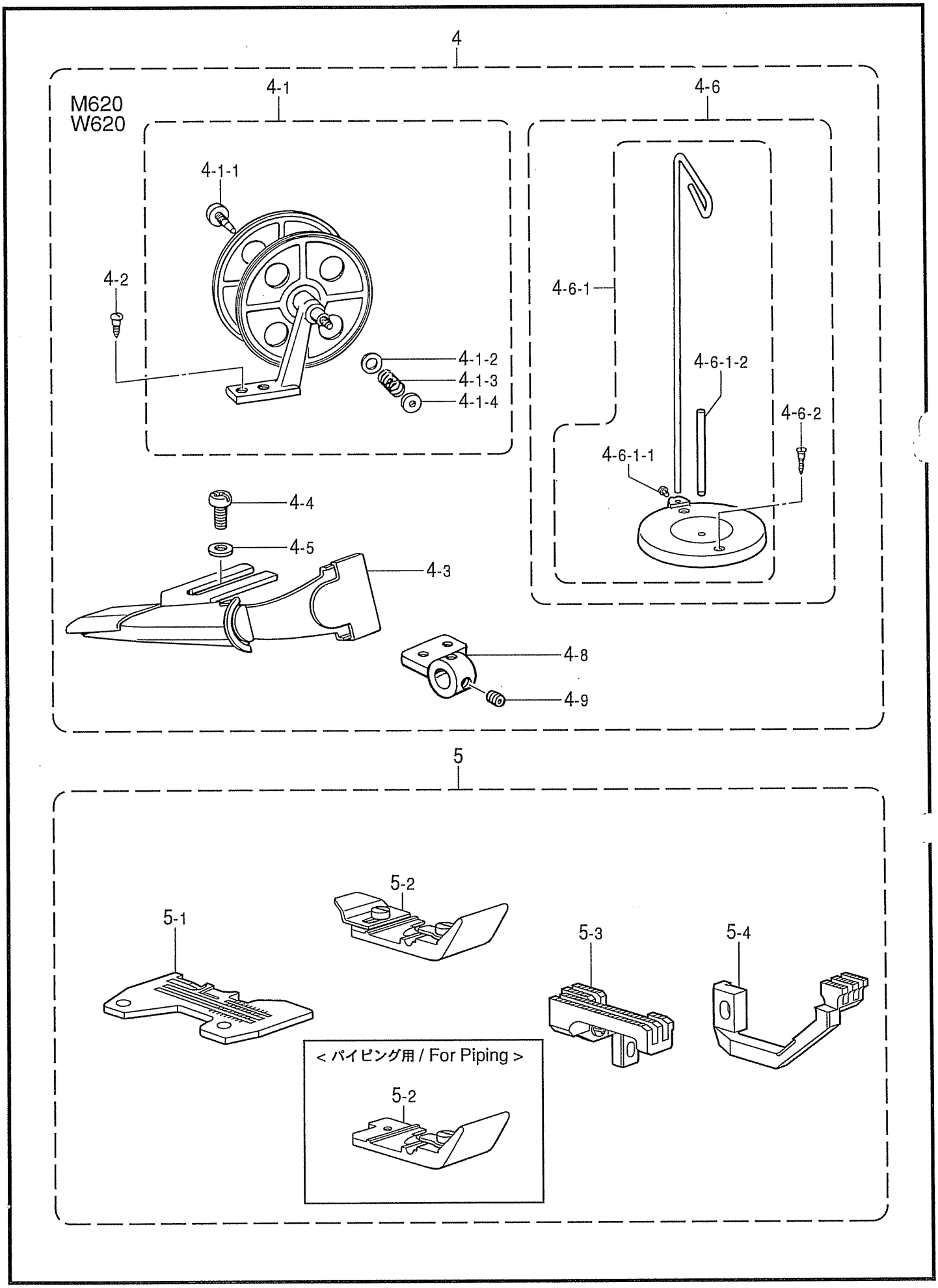
4
M620
W620
4-1
4-6
4-1-1
4-2
4-1-2
4-1-3
4-1-4
4-6-1
4-6-1-2
4-6-2
4-6-1-1
4-4
4-5
4-3
4-8
4-9
5
5-1
5-2
5-3
5-4
< パイピング用 / For Piping >
5-2

878-N21-940

P3. ラフラー装置関係 / Ruffling attachment

REF.NO	CODE	Q'TY	ヒンメイ	NAME OF PARTS	RM
4	S30303001	1	ﾊﾟｲﾋﾟﾝｸﾞﾊﾟｰﾂｸﾐ	PIPING PARTS ASSY	
4-1	143767102	1	ﾃｰﾌﾟﾜｲﾝﾀﾞｰｸﾐ	TAPE WINDER ASSY	
4-1-1	143980001	1	ﾂﾏﾐﾈｼﾞ	SCREW	
4-1-2	108494001	1	ｻﾞｶﾞﾈ	WASHER	
4-1-3	108495001	1	ﾃｰﾌﾟﾜｲﾝﾀﾞｵｼﾊﾞﾈ	SPRING, COMPRESSION	
4-1-4	100136001	1	ｲﾄﾁｮｳｼﾅﾂﾄ	NUT, TENSION	
4-2	101118001	2	ﾏﾙﾓｸﾈｼﾞ4.5X20	WOOD SCREW, ROUND M4.5X20	
4-3	S21318000	1	ﾗﾂﾊﾟｰｸﾐ	LAPPER ASSY	
4-4	062400812	2	ﾅﾍﾞｺ4X8	SCREW, PAN M4X8	
4-5	025040232	2	ﾋﾗｻﾞｶﾞﾈﾁｭｳ4	WASHER, PLAIN M 4	
4-6	S20130009	1	ｲﾄﾀﾃﾀﾞｲｸﾐﾈｼﾞﾂｷ	COTTON STAND ASSY, W/SCREW	
4-6-1	S20131009	1	ｲﾄﾀﾃﾀﾞｲｸﾐ	COTTON STAND ASSY	
4-6-1-1	S20134001	1	ｼﾒﾈｼﾞW476-24X10	SCREW, W4.76-24X10	
4-6-1-2	S20135001	1	ｲﾄﾀﾃﾎﾞｳ	SPOOL PIN	
4-6-2	034422006	2	+2ｻﾗﾓｸ41X20	WOOD SCREW, FLAT 2 M4.1X20	
4-8	S25019001	1	ﾗﾂﾊﾟｰﾄﾞﾀﾞｲ	LAPPER BASE	
4-9	S23651002	2	ｱﾅﾋﾗ6X6ﾎｿﾒ	SET SCREW, SOCKET (FT) M6X5	
5	S30291001	1	ﾗﾌﾗｰｹﾞｰｼﾞｸﾐ	RUFFLER GAUGE ASSY	
5-1	S19162001	1	ﾊﾘｲﾀ	NEEDLE PLATE	
5-2	S19291001	1	ｵｻｴｸﾐ	PRESSER FOOT ASSY	
5-3	S19500001	1	ｼｭｵｸﾘﾊﾞｸﾐ	MAIN FEED DOG ASSY	
5-4	S19243001	1	ｻﾄﾞｳｵｸﾘﾊﾞ	DIFFERENTIAL FEED DOG	
			＜ﾊﾟｲﾋﾟﾝｸﾞ用＞	<For Piping>	
5	S30292001	1	P.ﾗﾌﾗｰｹﾞｰｼﾞｸﾐ	PIPING RUFFLER GAUGE ASSY	
5-1	S19162001	1	ﾊﾘｲﾀ	NEEDLE PLATE	
5-2	S25538001	1	ｵｻｴｸﾐ	PRESSER FOOT ASSY	
5-3	S19500001	1	ｼｭｵｸﾘﾊﾞｸﾐ	MAIN FEED DOG ASSY	
5-4	S19243001	1	ｻﾄﾞｳｵｸﾘﾊﾞ	DIFFERENTIAL FEED DOG	

	REF.NO	W420-25, M420-25		W620-25, M620-25	
		半沈 Semi-submerged	全沈 Fully-submerged	半沈 Semi-submerged	全沈 Fully-submerged
ラフラーシヨウセット Ruffler set		S43535-001	S43537-001	-	-
P. ラフラーシヨウセット Piping ruffler set		-	-	S43536-001	S43538-001
ラフラークミ Ruffler assy	1	S30134-001	←	←	←
ラフラーオサエレンドウクミ Ruffling device set	2	S43530-001	←	←	←
サドウチョウセツセット Differential adjusting set	3	S30135-101	S30135-102	S30135-101	S30135-102
パイピングパーツクミ Piping parts assy	4	-	-	S30303-001	←
ラフラーゲージクミ Ruffler gauge assy	5	S30291-001	←	-	-
P.ラフラーゲージクミ Piping ruffler gauge assy	5	-	-	S30292-001	←

Z1. 付属品関係 / Accessories

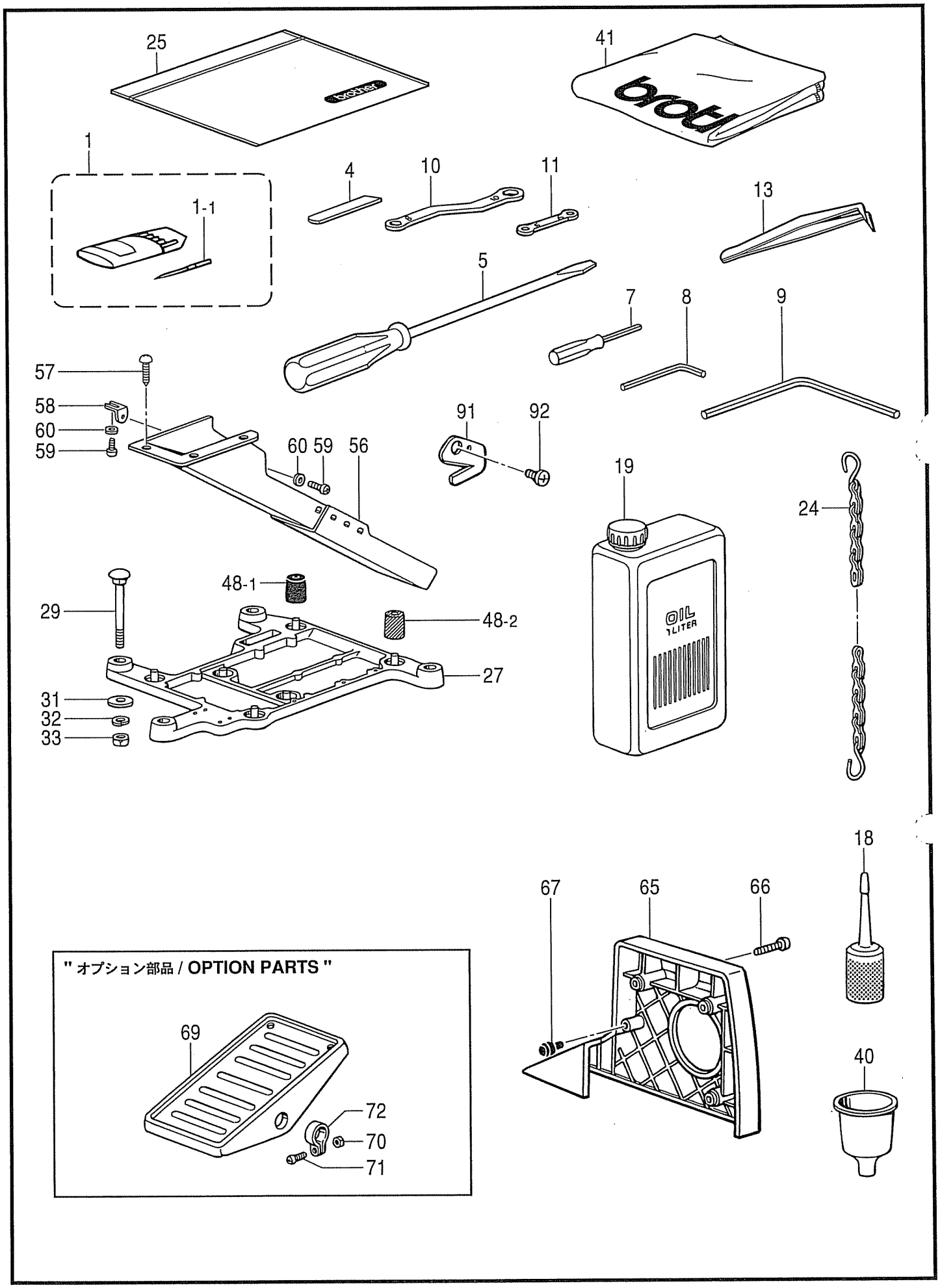

878-N21-910

Z1. 付属品関係 / Accessories

REF.NO	CODE	Q'TY	ヒンメイ	NAME OF PARTS	RM
1	*	2	ﾐｼﾝﾊﾘｸﾐ	NEEDLE ASSY	
1-1	*	8	ﾐｼﾝﾊﾘ	NEEDLE	
4	*	1	ｼﾀﾒｽ	LOWER KNIFE, T=1.5	
5	101572101	1	ﾈｼﾞﾏﾜｼ5.5X190	SCREW DRIVER, 5.5X190	
7	S01943001	1	6ｶｸﾎﾞｳﾈｼﾞﾏﾜｼ1.6	SCREW DRIVER, HEX. 1.6	
8	142002001	1	6ｶｸﾎﾞｳｽﾊﾟﾅ2	HEXAGONAL WRENCH, 2	
9	149570001	1	6ｶｸﾎﾞｳｽﾊﾟﾅ5	HEXAGONAL WRENCH, 5	
10	S23356001	1	ﾒｶﾞﾈﾚﾝﾁ8X10	DOUBLE WRENCH, 8X10	
11	S46907001	1	ﾒｶﾞﾈﾚﾝﾁ5X6	WRENCH, 5X6	
13	117466000	1	ﾋﾟﾝｾｯﾄ	PINCETTE	
18	S06701000	1	ﾎﾟﾘｵｲﾗｰｸﾐ	POLY OILER ASSY	
19	S55666002	1	ｵｲﾙﾀﾝｸBｸﾐ	OIL TANK ASSY, B	
24	142262001	1	ｸｻﾘFｸﾐ	CHAIN ASSY, F	
25	122991001	1	ﾌｿﾞｸﾋﾝﾎﾟﾘﾌｸﾛ	ACCESSORY BAG	
27	S20718000	1	ﾄｳﾌﾞｳｹ	HEAD PLATE	
29	S35997001	4	ｶｸﾈﾎﾞﾙﾄ8X85	BOLT, M8X85	
31	213650001	4	ﾜ2.3X8.5X38ST	WASHER, 2.3X8.5X38ST	
32	028080242	4	ﾊﾞﾈｻﾞｶﾞﾈ2-8	WASHER, SPRING 2-8	
33	021080106	4	ﾅｯﾄ1ｼｭ8	NUT, 1 M8	
40	S20769000	1	ｼﾞｮｰｺﾞ	FUNNEL	
41	144225002	1	ﾄｳﾌﾞｶﾊﾞｰ	HEAD COVER	
48-1	147919051	1	ﾎﾞｳｼﾝｺﾞﾑ	RUBBER CUSHION	
48-2	147919052	3	ﾎﾞｳｼﾝｺﾞﾑ	RUBBER CUSHION	
56	183797009	1	ﾀﾞｽﾀｰｼｭｰﾄｸﾐ	DUSTER CHUTE ASSY	
57	031411304	3	ﾏﾙﾓｸﾈｼﾞ4.1X13	WOOD SCREW, ROUND M4.1X13	
58	S23353001	1	ﾀﾞｽﾀｰｼｭｰﾄｻﾎﾟｰﾄS	DUSTER SHOOT SUPPORT, S	
59	062400612	2	ﾅﾍﾞｺM4X6	SCREW, PAN M4X6	
60	025040332	2	ﾋﾗｻﾞｶﾞﾈﾀﾞｲ4	WASHER, PLAIN L 4	
65	S38302020	1	ﾍﾞﾙﾄｶﾊﾞｰ	BELT COVER	
66	062061412	3	ﾅﾍﾞｺ6X14	SCREW, PAN M6X14	
67	S20412000	1	ｺﾞﾑｾﾝ3.7	RUBBER CAP, 3.7	
			"ｵﾌﾟｼｮﾝ部品"	"OPTION PARTS"	
69	147893009	1	ｵｻｴｱｹﾞﾌﾐｲﾀ	TREADLE PEDAL	
70	021400106	2	ﾅｯﾄ1ｼｭ4	NUT, 1 M4	
71	062401406	2	ﾅﾍﾞｺ4X14	SCREW, PAN M4X14	
72	116016001	2	ﾍﾟﾀﾙﾄﾒ	PEDAL STOPPER	
91	S20118151	1	ｶﾗﾇｲﾒｽ	TRIMMING KNIFE	
92	060300512	1	ﾊﾞｲﾝﾄﾞM3X5	SCREW, BIND M3X5	

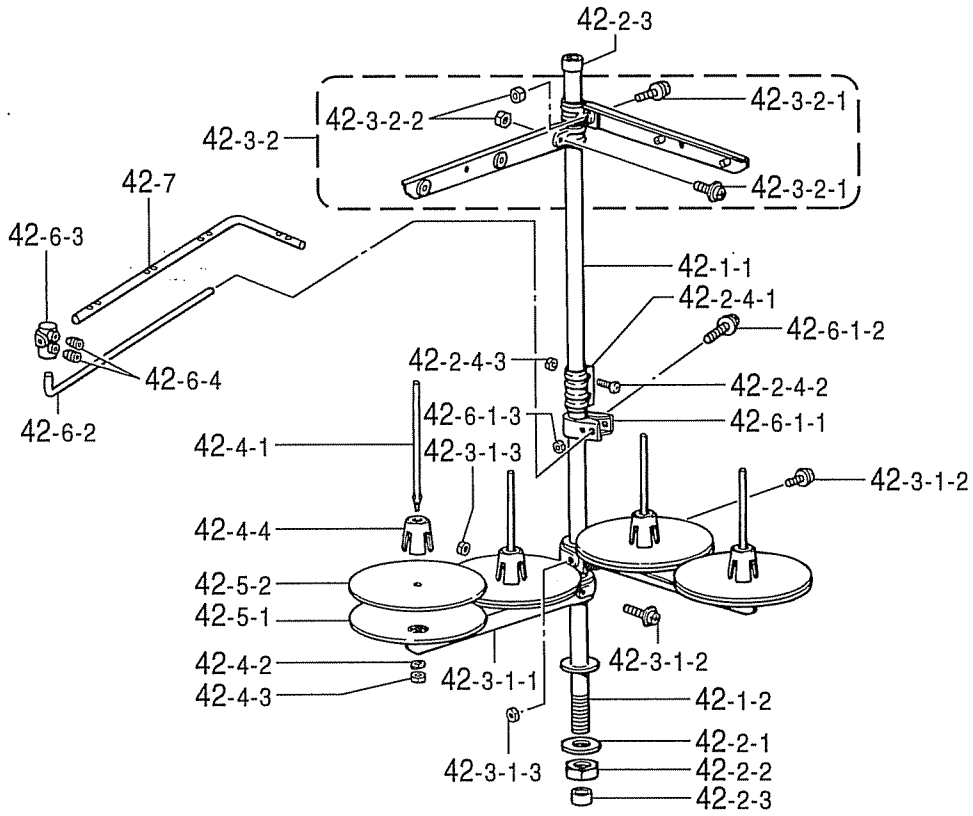

" オプション部品 / **OPTION PARTS** "

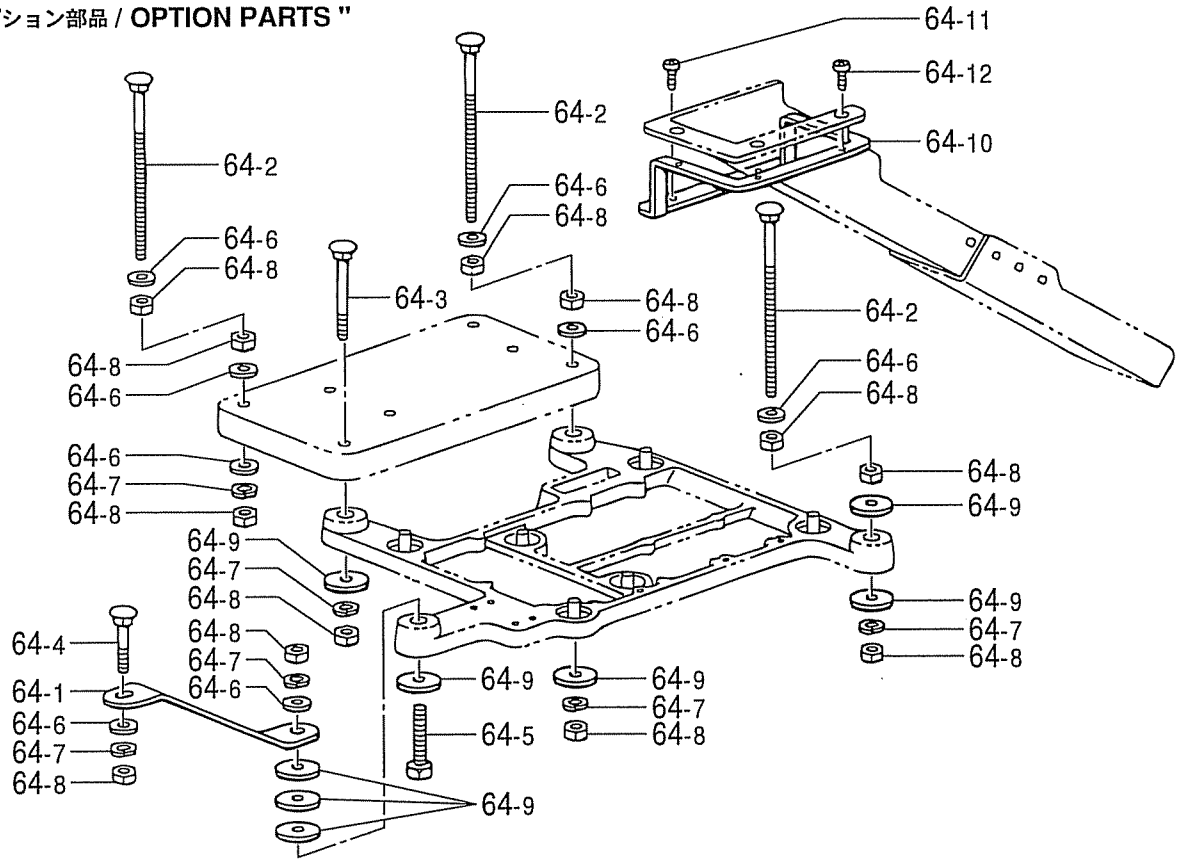

878-N21-910

Z2. 付属品関係 / Accessories

REF.NO	CODE	Q'TY	ヒンメイ	NAME OF PARTS	RM
42	S45952001	1	ｲﾄﾀﾃﾀﾞｲｸﾐ4DTHF	COTTON STAND ASSY, 4DTHF	
42-1	S45955001	1	ｺﾗﾑﾊﾟｲﾌﾟｾｯﾄ	COLUMN PIPE SET	
42-1-1	150172023	1	ｺﾗﾑﾊﾟｲﾌﾟ	COLUMN PIPE	
42-1-2	S36064021	1	ｺﾗﾑﾊﾟｲﾌﾟD	COLUMN PIPE, D	
42-2	S45956001	1	ｼﾞｮｲﾝﾄｾｯﾄ	JOINT SET	
42-2-1	150206022	1	ﾋﾗｻﾞｶﾞﾈ16	WASHER, PLAIN 16	
42-2-2	S36062021	1	6ｶｸﾅｯﾄM16	NUT, M16	
42-2-3	S35635020	2	ｺﾗﾑｷｬｯﾌﾟ	COLUMN CAP	
42-2-4	S35828021	1	ｺﾗﾑｼﾞｮｲﾝﾄｸﾐ	COLUMN JOINT ASSY	
42-2-4-1	150173023	1	ｺﾗﾑｼﾞｮｲﾝﾄ	COLUMN JOINT	
42-2-4-2	S35826021	2	ﾅﾍﾞｺ5X14	SCREW, PAN M5X14	
42-2-4-3	S35827021	2	1ｼｭﾅｯﾄ5	NUT, 1 M5	
42-3	S45968001	2	ﾎﾙﾀﾞｾｯﾄ2	HOLDER SET, 2	
42-3-1	S45969001	2	ｽﾌﾟｰﾙﾎﾙﾀﾞｰｸﾐ2	SPOOL HOLDER ASSY, 2	
42-3-1-1	S02778022	2	ｽﾌﾟｰﾙﾎﾙﾀﾞｰ2	SPOOL HOLDER, 2	
42-3-1-2	S35831021	2	+ﾅﾍﾞｻﾞｸﾐ5X30A	SCREW, PAN (S/P WASHER) M5X30	
42-3-1-3	S35827021	2	1ｼｭﾅｯﾄ5	NUT, 1 M5	
42-3-2	S45970001	2	ｽﾚｯﾄﾞﾊﾝｶﾞｰｸﾐ2	THREAD HANGER ASSY, 2	
42-3-2-1	S35832021	2	+ﾅﾍﾞｻﾞｸﾐ5X14A	SCREW, PAN (S/P WASHER) M5X14	
42-3-2-2	S35827021	2	1ｼｭﾅｯﾄ5	NUT, 1 M5	
42-4	S45971001	2	ｽﾌﾟｰﾙﾈｼﾞｾｯﾄ2	SPOOL SCREW SET, 2	
42-4-1	150179022	4	ｽﾌﾟｰﾙｼﾞｸB	SPOOL SHAFT, B	
42-4-2	028050246	4	ﾊﾞﾈｻﾞｶﾞﾈ2-5	WASHER, SPRING 2-5	
42-4-3	S35827021	4	1ｼｭﾅｯﾄ5	NUT, 1 M5	
42-4-4	126863021	4	ｽﾌﾟｰﾙｸｯｼｮﾝ	SPOOL CUSHION	
42-5	S45972001	2	ｳｹｻﾞﾗｾｯﾄ2	SPOOL STAND BASE SET	
42-5-1	150180021	4	ｳｹｻﾞﾗ	SPOOL STAND BASE	
42-5-2	150182020	4	ｽﾌﾟｰﾙﾏｯﾄ	SPOOL MAT	
42-6	S45960001	1	ｲﾄｱﾝﾅｲﾎﾙﾀﾞｾｯﾄ	THREAD GUIDE HOLDER SET	
42-6-1	S45967001	1	ｲﾄｱﾝﾅｲﾎﾙﾀﾞｸﾐ	THREAD GUIDE HOLDER ASSY	
42-6-1-1	150185009	1	ｲﾄｱﾝﾅｲﾎﾙﾀﾞｰ	THREAD GUIDE HOLDER	
42-6-1-2	S35831021	1	+ﾅﾍﾞｻﾞｸﾐ5X30A	SCREW, PAN (S/P WASHER) M5X30	
42-6-1-3	S35827021	1	1ｼｭﾅｯﾄ5	NUT, 1 M5	
42-6-2	S04109001	1	ｲﾄｱﾝﾅｲｻｻｴﾎﾞｳ	SUPPORT BAR, ;TR-GUIDE	
42-6-3	S45961001	1	ｻｻｴﾎﾞｳﾂｷﾞﾃ	JOINT	
42-6-4	012060632	2	ｱﾅﾋﾗ6X6	SET SCREW, SOCKET (FT) M6X6	
42-7	142998101	1	ｲﾄｱﾝﾅｲ4	THREAD GUIDE, 4	
			"ｵﾌﾟｼｮﾝ部品"	"OPTION PARTS"	
64	183798001	1	ﾌﾙｻﾌﾞﾏｰｼﾞｾｯﾄ	FULL SUBMERGED SET	
64-1	S20721001	1	ﾄｳﾌﾞｳｹｻｻｴ	HEAD PLATE SUPPORT	
64-2	153318201	4	ｶｸﾈﾏﾙｱﾀﾏﾎﾞﾙﾄ	BOLT	
64-3	S35997001	1	ｶｸﾈﾎﾞﾙﾄ8X85	BOLT, M8X85	
64-4	S36007001	1	ｶｸﾈﾎﾞﾙﾄ8X55	BOLT, M8X55	
64-5	017085502	1	ﾎﾞﾙﾄM8X55	BOLT, M8X55	
64-6	025080236	11	ﾋﾗｻﾞｶﾞﾈﾁｭｳ8	WASHER, PLAIN M 8	
64-7	028080242	7	ﾊﾞﾈｻﾞｶﾞﾈ2-8	WASHER, SPRING 2-8	
64-8	021080106	15	ﾅｯﾄ1ｼｭ8	NUT, 1 M8	
64-9	213650001	8	ﾜ2.3X8.5X38ST	WASHER, 2.3X8.5X38ST	
64-10	S20722001	1	ﾀﾞｽﾀｰｼｭｰﾄｻｻｴL	DUSTER SHOOT SUPPORT, L	
64-11	060400812	2	ﾊﾞｲﾝﾄﾞM4X8	SCREW, BIND M4X8	
64-12	060400812	3	ﾊﾞｲﾝﾄﾞM4X8	SCREW, BIND M4X8	

Ga1 . ゲージ部品一覧表 / Gauge parts List

下の表は サブクラスの番号順に 並べてあります

用途 Application	一般地縫用 Thin Medium (1本外シ) (Mock-Safety)		一般地縫用 Thin Medium (小回り用) (For small type) (1本外シ) (Mock-Safety)	デニム用 Heavy (1本外シ) (Mock-Safety)	バルキーニット用 Bulky knit (1本外シ) (Mock-Safety)
サブクラス Sub-Class	M020-24-H3F -25-H3F -26-H3F -27-H3F	M020-35-H3F -36-H3F -37-H3F	M021-25-H8F -26-H8F -27-H8F	M040-36-E3W -37-E3W	M060-25-H8V -26-H8V -27-H8V
針巾 (mm) Needle Gauge	2.2	3	2.2	3	2.2
1 針 Needle	151474-011			151474-018	151474-014
2 押エ組 Presser Foot Assy (ツメ Stitch Tongue)	S25543-001 (4) (S25544-001) S19280-001 (5) (S19976-001) S19282-001 (6, 7) (S19283-001)	S19284-001 (5) (S19976-001) S19285-001 (6) (S19286-001) S19289-001 (7) (S19975-001)	S29952-001 (4) (S25544-001) S29950-001 (5) (S19976-001) S29951-001 (6, 7) (S19283-001)	S29871-001 (6) (S19286-001) S29869-001 (7) (S19975-001)	S19287-201 (5) (S19976-001) S19288-201 (6, 7) (S19283-001)
3 針止メ組 Needle Clamp Assy	S20398-001	S20402-001	S20398-001	S20402-001	S20398-001
4 針板 Needle Plate	S25190-001 (4) S19162-001 (5) S19163-001 (6) S25191-001 (7)	S19164-001 (5) S19165-001 (6) S19168-001 (7)	S25527-001 (4) S19169-001 (5) S19170-001 (6) S25193-001 (7)	S24663-001 (6) S24664-001 (7)	S19166-001 (5) S19167-001 (6) S25192-001 (7)
5 主送り歯組 Main Feed Dog Assy (主送り歯 Main Feed Dog) (補助送り歯 Chain Feed Dog)	S19199-001 (S19200-001) (S19201-001) A		S19212-001 (S19213-001) (S19204-001) B	S21392-001 (S21393-001) (S21394-001) J	S19202-001 (S19955-001) (S19204-001) B
6 差動送り歯 Differential Feed Dog	S19236-001	S19242-001	S19240-001	S21395-001	S19237-101
7 上メス Upper Knife	上メス Upper knife 144074-350			角メス Angle knife S20898-101	角メス Angle knife S20897-101
8 下メス Lower Knife	S20582-001 (T=1.5)	(5) S20899-001 (T=1.0) (6, 7) S20582-001 (T=1.5)	S20582-001 (T=1.5)	S20583-001	(5) S20899-001 (T=1.0) (6, 7) S20582-001 (T=1.5)
9 上ルーパ Over Looper	S20436-001 F	S20434-001 E	S20436-001 F	S20442-001 R	S20434-001 E

Ga2 . ゲージ部品一覧表 / Gauge parts List

用途 Application	バルキーニット用 Bulky knit (1本外シ) (Mock-Safety)	ラフラー用 (1本外シ) Ruffling (Mock-Safety)	テープ用 Taping (1本外シ) (Mock-Safety)	バルキーニット(テープ用) Bulky knit (Taping) (1本外シ) (Mock-Safety)	パイピングラフラー用 Ruffling W / Piping (1本外シ) (Mock-Safety)
サブクラス Sub-Class	M060-25-H4V -26-H4V -27-H4V	M420-25-H3F	M520-25-H8F -26-H8F	M560-25-H8V -26-H8V -27-H8V	M620-25-H3F -26-H3F
針巾 (mm) Needle Gauge	2.2				
1 針 Needle	151474-014	151474-011		151474-014	151474-011
2 押エ組 Presser Foot Assy (ツメ Stitch Tongue)	S19287-201 (5) (S19976-001) S19288-201 (6, 7) (S19283-001)	S19291-001	S19293-001 (5) (S19974-001) S25546-001 (6) (S25547-001)	S19297-001 (5) (S19976-001) S19301-001 (6, 7) (S19283-001)	S25538-001
3 針止メ組 Needle Clamp Assy	S20398-001				
4 針板 Needle Plate	S25528-001 (5) S19188-001 (6) S25529-001 (7)	S19162-001	S19169-001 (5) S19170-001 (6) S25193-001 (7)		S19162-001 (5) S19163-001 (6)
5 主送り歯組 Main Feed Dog Assy (主送り歯 Main Feed Dog) (補助送り歯 Main Feed Dog)	S24680-001 (S24681-001) (S19201-001) A 1.0 1.6	S19500-001 (S19218-001) (S19201-001) A 1.0 1.6	S19212-001 (S19213-001) (S19204-001) B 1.0 1.6	S19219-001 (S19220-001) (S19204-001) B 1.0 1.6	S19500-001 (S19218-001) (S19201-001) A 1.0 1.6
6 差動送り歯 Differential Feed Dog	S30894-101 1.0 1.6	S19243-001 1.0 1.6	S19240-001 1.0 1.6	S19244-101 1.0 1.6	S19243-001 1.0 1.6
7 上メス Upper Knife	角メス Angle knife S20897-101 7.8	上メス Upper knife 144074-350		角メス Angle knife S20897-101 7.8	上メス Upper knife 144074-350
8 下メス Lower Knife T	(5) S20899-001 (T=1.0) (6, 7) S20582-001 (T=1.5)	S20582-001 (T=1.5)			
9 上ルーパ Over Looper	S20434-001 E	S20436-001 F		S20434-001 E	S20436-001 F

用途 Application	一般地縫用 Thin Medium チェーンランドあり With Chain Land	一般地縫用 Thin Medium チェーンランドなし Without Chain Land	一般地縫用 Thin Medium	一般地縫用 Thin Medium (小回り用) (For small type)	デニム用 Heavy
サブクラス Sub-Class	W020-24-H3F -25-H3F -26-H3F -27-H3F	W020-24-H8F -25-H8F -26-H8F -27-H8F	W020-35-H3F -36-H3F -37-H3F	W021-24-H8F -25-H8F -26-H8F -27-H8F	W040-36-E3W -37-E3W
針巾 (mm) Needle Gauge	2.2		3	2.2	3
1 針 Needle	151474-011				151474-018
2 押エ組 Presser Foot Assy (ツメ Stitch Tongue)	S25543-001 (4) (S25544-001) S19280-001 (5) (S19976-001) S19282-001 (6, 7) (S19283-001) 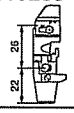		S19284-001 (5) (S19976-001) S19285-001 (6) (S19286-001) S19289-001 (7) (S19975-001) 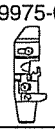	S29952-001 (4) (S25544-001) S29950-001 (5) (S19976-001) S29951-001 (6, 7) (S19283-001) 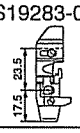	S29871-001 (6) (S19286-001) S29869-001 (7) (S19975-001)
3 針止メ組 Needle Clamp Assy	S20398-001 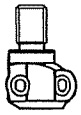		S20402-001 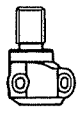	S20398-001 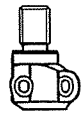	S20402-001 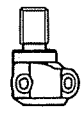
4 針板 Needle Plate	S25190-001 (4) S19162-001 (5) S19163-001 (6) S25191-001 (7) 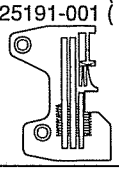	S25527-001 (4) S19169-001 (5) S19170-001 (6) S25193-001 (7) 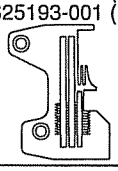	S19164-001 (5) S19165-001 (6) S19168-001 (7) 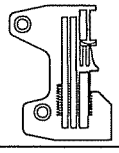	S25527-001 (4) S19169-001 (5) S19170-001 (6) S25193-001 (7) 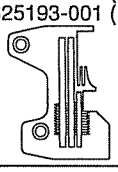	S24663-001 (6) S24664-001 (7) 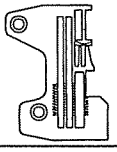
5 主送り歯組 Main Feed Dog Assy (主送り歯 Main Feed Dog) (補助送り歯 Chain Feed Dog)	S19217-001 (S19213-001) (S19201-001) A 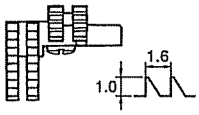	S19212-001 (S19213-001) (S19204-001) B 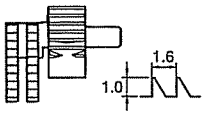	S19199-001 (S19200-001) (S19201-001) A 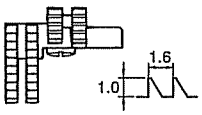	S19212-001 (S19213-001) (S19204-001) B 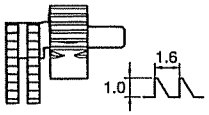	S21392-001 (S21393-001) (S21394-001) J 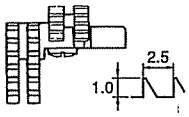
6 差動送り歯 Differential Feed Dog	S19240-001 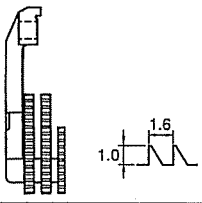		S19242-001 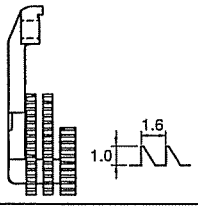	S19240-001 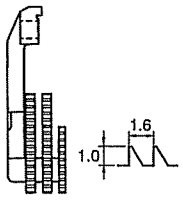	S21395-001 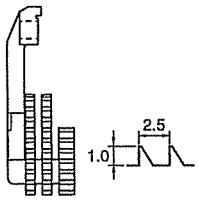
7 上メス Upper Knife	上メス Upper knife 144074-350 				角メス Angle knife S20898-101 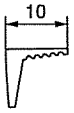
8 下メス Lower Knife 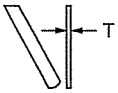	S20582-001 (T=1.5)		(5) S20899-001 (T=1.0) (6, 7) S20582-001 (T=1.5)	S20582-001 (T=1.5)	S20583-001 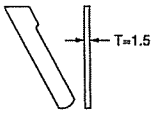
9 上ルーパ Over Looper 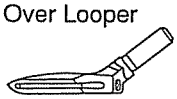	S20424-001 B		S20432-001 J	S20424-001 B	S49054-001 S

用途 Application	デニム用 Heavy (トラクター押エ) (Tractor Type)	バルキーニット用 Bulky knit			ラフラー用 Ruffling
サブクラス Sub-Class	W050-36-E3W -37-E3W	W060-25-H8V -26-H8V -27-H8V	W060-25-H4V -26-H4V -27-H4V	W070-X6-E8V -X7-E8V	W420-25-H3F
針巾 (mm) Needle Gauge	3	2.2		2.5	2.2
1 針 Needle	151474-018	151474-014			151474-011
2 押エ組 Presser Foot Assy (ツメ Stitch Tongue)	S30898-001 (S30900-001)	S19287-201 (5) (S19976-001) S19288-201 (6, 7) (S19283-001)		S19303-201 (6) (S19286-001) S20881-201 (7) (S19975-001)	S19291-001
3 針止メ組 Needle Clamp Assy	S20402-001	S20398-001		S20400-001	S20398-001
4 針板 Needle Plate	S24663-001 (6) S24664-001 (7)	S19166-001 (5) S19167-001 (6) S25192-001 (7)	S25528-001 (5) S19188-001 (6) S25529-001 (7)	S19173-001 (6) S20880-001 (7)	S19162-001
5 主送り歯組 Main Feed Dog Assy (主送り歯 Main Feed Dog 補助送り歯 Chain Feed Dog)	S21392-001 (S21393-001) (S21394-001) J 2.5 1.0	S19202-001 (S19955-001) (S19204-001) B 2.5 1.0	S24680-001 (S24681-001) (S19201-001) A 1.6 1.0	S19202-001 (S19955-001) (S19204-001) B 2.5 1.0	S19500-001 (S19218-001) (S19201-001) A 1.6 1.0
6 差動送り歯 Differential Feed Dog	S21395-001 2.5 1.0	S19237-101 2.5 1.0	S30894-101 1.6 1.0	S19237-101 2.5 1.0	S19243-001 1.6 1.0
7 上メス Upper Knife	角メス Angle knife S20898-101 10	角メス Angle knife S20897-101 7.8			上メス Upper knife 144074-350
8 下メス Lower Knife T	S20583-001 T=1.5	(5) S20899-001 (T=1.0) (6, 7) S20582-001 (T=1.5)		S20582-001 (T=1.5)	
9 上ルーパ Over Looper	S20438-101 G	S20430-001 D		S20440-101 K	S20424-001 B

Ga5 . ゲージ部品一覧表 / Gauge parts List

用途 Application	テープ用 Taping	バルキーニット(テープ用) Bulky knit (Taping)	パイピングラフラー用 Ruffling W / Piping	バックタック用 Back-Tacking	バルキーニットバックタック用 Bulky knit Back-Tacking
サブクラス Sub-Class	W520-25-H8F -26-H8F	W560-25-H8V -26-H8V -27-H8V	W620-25-H3F -26-H3F	W820-25-H3F -26-H3F	W870-X6-E8V
針巾 (mm) Needle Gauge	2.2				2.5
1 針 Needle	151474-011	151474-014	151474-011		151474-014
2 押工組 Presser Foot Assy (ツメ Stitch Tongue)	S19293-001 (5) (S19974-001) S25546-001 (6) (S25547-001)	S19297-001 (5) (S19976-001) S19301-001 (6, 7) (S19283-001)	S25538-001	S19302-001 (5, 6) (S19977-001)	S19303-201 (S19286-001)
3 針止メ組 Needle Clamp Assy	S20398-001				S20400-001
4 針板 Needle Plate	S19169-001 (5) S19170-001 (6) S25193-001 (7)		S19162-001 (5) S19163-001 (6)	S19981-001 (5) S19982-001 (6)	S33529-001
5 主送り歯組 Main Feed Dog Assy (主送り歯 Main Feed Dog) (補助送り歯 Chain Feed Dog)	S19212-001 (S19213-001) (S19204-001) B 1.0 1.6	S19219-001 (S19220-001) (S19204-001) B 1.0 1.6	S19500-001 (S19218-001) (S19201-001) A 1.0 1.6	S25007-001 (S25008-001) (S25009-001) K 1.0 1.6	S33530-001 (S33531-001) (S19204-001) B 1.0 2.5
6 差動送り歯 Differential Feed Dog	S19240-001 1.0 1.6	S19244-101 1.0 1.6	S19243-001 1.0 1.6	S25010-001 1.0 1.6	S33536-001 1.0 2.5
7 上メス Upper Knife	上メス Upper knife 144074-350	角メス Angle knife S20897-101 7.8	上メス Upper knife 144074-350		角メス Angle knife S20897-101 7.8
8 下メス Lower Knife T	S20582-001 (T=1.5)				
9 上ルーパ Over Looper	S20424-001 B	S20430-001 D	S20424-001 B		S20440-101 K

Wa. 警告ラベル / Warning labels

警告ラベル / Warning labels	品名 / Name of parts	Size(mm)	Code
	操作注意ラベル・和	40 X 64	S38350-001
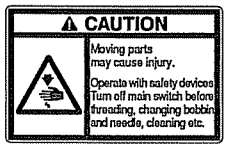	Label, operation Eng.	40 X 64	S38349-001
	アースマーク Mark, grounding	φ 12	S37060-001

878-N21-052

索引 / INDEX

CODE	REF.NO		page
004350812	G	31	18
011502012	J	1-29	24
	P1	2-17	34
012060632	A	43	2
	B	26	6
	B	25	6
	F1	25	12
	G	2	18
	G	6	18
	G	25-2	18
	H	6-1	22
	K	6-1	26
	M	17	30
	P1	2-4	34
	Z2	42-6-4	42
012400432	A	27-4	2
	A	32	2
	G	29	18
	J	1-13	24
	K	13	26
	M	4-2	30
	M	16	30
	P1	2-12	34
012400832	A	31	2
	G	32	18
	J	1-7-4	24
012500532	M	2	30
014780622	P2	3-1-1-6	36
	P2	3-2-1-6	36
017060812	K	8	26
	L	7	28
017061612	C	1-3-1	8
	H	1-2-1	22
017081606	P2	3-1-1-8	36
	P2	3-2-1-8	36
017085502	Z2	64-5	42
017500812	H	26	22
017501212	A	64	4
017781412	P2	3-1-1-4	36
	P2	3-1-1-10	36
	P2	3-1-1-13	36
	P2	3-2-1-4	36
	P2	3-2-1-10	36
	P2	3-2-1-13	36
018061432	G	53	18
	K	10	26
	M	6	30
018061632	F1	22	12
	G	8-1	18
	G	34	18
	G	40-1	18
	G	60	20
018062532	B	28	6
	C	16	8
	F1	13	12
018400832	A	20	2
	G	48-2	18
018401222	P1	1-2	34
018401622	C	1-1	8
	H	1-1	22
	K	1-1	26
	L	1-1	28
	L	1-1	28

CODE	REF.NO		page
021060302	P1	1-1-20	34
	P1	1-7	34
021080106	Z1	33	40
	Z2	64-8	42
021400106	Z1	70	40
021400202	P2	3-1-3	36
	P2	3-2-3	36
021400212	A	53	2
	E	1-5	10
	F1	18	12
	J	1-11	24
	P1	1-1-22	34
	P1	2-10	34
021500303	J	1-14-1	24
021500312	J	1-30	24
	P1	2-18	34
025030132	H	14	22
025040132	G	49	18
	H	11	22
	J	1-8	24
025040232	J	1-19	24
	P3	4-5	38
025040332	Z1	60	40
025050132	A	72	4
025060332	F1	14	12
025080236	Z2	64-6	42
025350332	A	68	4
	G	63	20
025710232	G	12	18
	G	13	18
026260136	F2	50-11-9	14
028050246	Z2	42-4-2	42
028060242	B	27	6
028080242	Z1	32	40
	Z2	64-7	42
031411304	Z1	57	40
034422006	P3	4-6-2	38
047301242	G	1-1-1	18
	G	1-2-1	18
047301642	F1	2-2	12
047401442	F1	21-1	12
047502542	F1	16	12
	G	57	20
047602042	A	54	2
048040342	G	14	18
048090342	F1	27	12
	G	19	18
048400242	B	14	6
060300412	F1	35	12
	N	30	32
060300512	Z1	92	40
060300612	F1	43	12
	N	52	32
060350812	A	67	4
	G	62	20
060351012	L	15	28
060400512	A	60	4
060400612	A	12	2
	A	27-7	2
	A	27-9	2
	A	34	2
	A	36	2
	A	46	2

CODE	REF.NO		page
060400612	A	50	2
	A	59	4
	F1	10	12
	G	22	18
	N	24	32
	N	32	32
	N	36	32
	N	41	32
	N	43	32
	N	45	32
060400812	A	15	2
	A	22-1	2
	H	29	22
	J	1-28	24
	M	24	30
	P1	2-14	34
	P1	2-16	34
	Z2	64-11	42
	Z2	64-12	42
060401012	A	25-1	2
	D	1-3	1[illegible]
	J	1-9	2[illegible]
060401412	A	28	2
060630412	F2	50-18-5	14
060630712	G	75-1	20
061400812	A	26	2
	B	6	6
	M	20	30
062060812	H	18	22
	H	21	22
062061412	Z1	66	40
062300412	H	16-2	22
062300512	E	1-7	10
	J	1-25	24
062300812	P1	1-1-11	34
062350512	P1	1-1-27	34
062350612	E	1-9	10
062350812	C	7-3	8
	C	24	8
	P1	2-5	34
062400612	A	30	[illegible]
	P1	1-1-25	34
	Z1	59	40
062400812	A	9	2
	B	5	6
	M	4-6	30
	P1	1-1-16	34
	P3	4-4	38
062401012	A	4	2
	B	22	6
	C	20	8
	E	2	10
	P2	3-1-4	36
	P2	3-2-4	36
062401212	A	52	2
	H	10-1	22
	J	1-20	24
	M	4-9	30
062401406	Z1	71	40
062401612	A	81	4
	H	10-2	22
	P1	1-1-21	34
062630612	F2	50-11-6	14

CODE	REF.NO	page
062670712	F1 41	12
	F2 50-25-9	16
072600000	B 7	6
076203000	B 15	6
081005070	G 11	18
081005670	G 56	20
081009070	A 78	4
081014670	A 6	2
081020070	G 21	18
081031870	B 4	6
100032003	A 40	2
	C 33	8
100136001	P3 4-1-4	38
100315002	A 41	2
101118001	P3 4-2	38
101572101	Z1 5	40
102707002	P1 1-8	34
104450101	C 11	8
105161004	F1 3	12
105288001	F2 50-10-5	14
106640001	F2 50-9-2	14
	F2 50-14-2	16
108494001	P3 4-1-2	38
108495001	P3 4-1-3	38
110832009	N 12	32
116016001	Z1 72	40
116794001	J 1-7-7	24
117466000	Z1 13	40
118550001	K 14	26
118735002	C 1-3-2	8
	H 1-2-2	22
122991001	Z1 25	40
126863021	Z2 42-4-4	42
140530002	F2 50-1-7	14
	F2 50-9-4	14
	F2 50-10-7	14
	F2 50-11-8	14
	F2 50-2-5	14
	F2 50-19-7	16
141183000	A 39	2
142002001	Z1 8	40
142262001	Z1 24	40
142998101	Z2 42-7	42
143767102	P3 4-1	38
143980001	P3 4-1-1	38
144074350	Ga1 7	43
	Ga2 7	44
	Ga4 7	46
	Ga5 7	47
	H 15-1	22
144103009	N 13	32
144225002	Z1 41	40
144784001	P1 1-1-10	34
146293001	C 6	8
146427001	C 12-1	8
	N 47	32
146592001	N 21	32
146598001	A 71	4
	E 1-3	10
146762001	E 1-8	10
147893009	Z1 69	40
147919051	Z1 48-1	40
147919052	Z1 48-2	40

CODE	REF.NO	page
147942001	M 8-1	30
	M 10-1	30
	M 13-1	30
148084001	M 18	30
148782001	L 13	28
148797001	P2 3-1-1-5	36
	P2 3-2-1-5	36
148798109	P2 3-1-1-7	36
	P2 3-2-1-7	36
149570001	Z1 9	40
150172023	Z2 42-1-1	42
150173023	Z2 42-2-4-1	42
150179022	Z2 42-4-1	42
150180021	Z2 42-5-1	42
150182020	Z2 42-5-2	42
150185009	Z2 42-6-1-1	42
150206022	Z2 42-2-1	42
150755001	F2 50-1-3	14
	F2 50-10-3	14
	F2 50-11-3	14
	F2 50-18-3	14
	F2 50-2-3	14
	F2 50-19-3	16
151474011	Ga1 1	43
	Ga2 1	44
	Ga3 1	45
151474014	Ga1 1	43
	Ga2 1	44
	Ga4 1	46
151474018	Ga1 1	43
	Ga3 1	45
153318201	Z2 64-2	42
154841001	A 76	4
155162001	C 7-6	8
	K 9-2-2	26
155197101	P2 3-1-1-1	36
	P2 3-2-1-1	36
155199101	P2 3-1-1-3	36
	P2 3-2-1-3	36
155247000	H 3	22
	K 11	26
	L 10	28
155559001	B 12	6
156482000	A 51	2
183797009	Z1 56	40
183798001	Z2 64	42
213650001	Z1 31	40
	Z2 64-9	42
S00075000	A 66	4
S01295001	F2 50-1-5	14
	F2 50-19-5	16
	F2 50-25-2	16
S01943001	Z1 7	40
S02573020	G 38	18
S02606020	A 3	2
S02778022	Z2 42-3-1-1	42
S04109001	Z2 42-6-2	42
S06701000	Z1 18	40
S06704001	D 1-4	10
S09234001	J 1-7-2	24
S09235001	J 1-7-3	24
S19162001	Ga1 4	43
	Ga2 4	44

CODE	REF.NO	page
S19162001	Ga2 4	44
	Ga3 4	45
	Ga4 4	46
	Ga5 4	47
	P3 5-1	38
S19163001	Ga1 4	43
S19163001	Ga2 4	44
	Ga3 4	45
	Ga5 4	47
	Ga1 4	43
S19165001	Ga1 4	43
S19166001	Ga1 4	43
S19166001	Ga4 4	46
	Ga1 4	43
S19167001	Ga4 4	46
	Ga1 4	43
S19169001	Ga1 4	43
S19169001	Ga2 4	44
	Ga3 4	45
	Ga5 4	47
	Ga1 4	43
S19170001	Ga2 4	44
	Ga3 4	45
	Ga5 4	47
	Ga4 4	46
S19188001	Ga2 4	44
S19188001	Ga4 4	46
	Ga1 5	43
S19199001	Ga3 5	45
	Ga1 5	43
S19200001	Ga3 5	45
	Ga1 5	43
S19201001	Ga2 5	44
	Ga2 5	44
	Ga2 5	44
	Ga3 5	45
	Ga3 5	45
	Ga4 5	46
	Ga4 5	46
	Ga5 5	47
	Ga1 5	43
S19202001	Ga4 5	46
	Ga4 5	46
	Ga1 5	43
S19204001	Ga1 5	43
	Ga2 5	44
	Ga2 5	44
	Ga3 5	45
	Ga3 5	45
	Ga4 5	46
	Ga4 5	46
	Ga5 5	47
	Ga5 5	47
	Ga5 5	47
	Ga1 5	43
S19212001	Ga2 5	44
	Ga3 5	45
	Ga3 5	45
	Ga5 5	47
	Ga1 5	43
S19213001	Ga2 5	44
	Ga3 5	45
	Ga5 5	47

CODE	REF.NO	page
S19217001	Ga3 5	45
S19218001	Ga2 5	44
	Ga2 5	44
	Ga4 5	46
	Ga5 5	47
S19219001	Ga2 5	44
	Ga5 5	47
S19220001	Ga2 5	44
	Ga5 5	47
S19236001	Ga1 6	43
S19237101	Ga1 6	43
	Ga4 6	46
S19240001	Ga1 6	43
	Ga2 6	44
	Ga3 6	45
	Ga5 6	47
S19242001	Ga1 6	43
	Ga3 6	45
S19243001	Ga2 6	44
	Ga4 6	46
	Ga5 6	47
	P3 5-4	38
	P3 5-4	38
S19244101	Ga2 6	44
	Ga5 6	47
S19258001	F2 50-1-4	14
S19259001	F2 50-1-6	14
	F2 50-9-3	14
	F2 50-10-6	14
	F2 50-2-4	14
	F2 50-19-6	16
S19279001	F2 50-11-4	14
	F2 50-18-4	14
S19280001	Ga1 2	43
	Ga3 2	45
S19282001	Ga1 2	43
	Ga3 2	45
S19283001	Ga1 2	43
	Ga2 2	44
	Ga3 2	45
	Ga4 2	46
	Ga5 2	47
S19284001	Ga1 2	43
	Ga3 2	45
S19285001	Ga1 2	43
	Ga3 2	45
S19286001	Ga1 2	43
	Ga3 2	45
	Ga4 2	46
	Ga5 2	47
S19287201	Ga1 2	43
	Ga2 2	44
	Ga4 2	46
S19288201	Ga1 2	43
	Ga2 2	44
	Ga4 2	46
S19289001	Ga1 2	43
	Ga3 2	45
S19291001	Ga2 2	44
	Ga4 2	46
	P3 5-2	38
S19293001	Ga2 2	44
	Ga5 2	47

CODE	REF.NO	page
S19296001	F2 50-10-4	14
S19297001	Ga2 2	44
	Ga5 2	47
S19299001	F2 50-11-7	14
S19300001	F2 50-11-5	14
S19301001	Ga2 2	44
	Ga5 2	47
S19302001	Ga5 2	47
S19303201	Ga4 2	46
	Ga5 2	47
S19311101	F2 50-25-8	16
S19496001	F2 50-1-2	14
	F2 50-9-1	14
	F2 50-10-2	14
	F2 50-11-2	14
	F2 50-18-2	14
	F2 50-2-2	14
	F2 50-14-1	16
	F2 50-19-2	16
S19500001	Ga2 5	44
	Ga4 5	46
	Ga5 5	47
	P3 5-3	38
S19955001	Ga1 5	43
	Ga4 5	46
S19974001	Ga2 2	44
	Ga5 2	47
S19975001	Ga1 2	43
	Ga3 2	45
	Ga4 2	46
S19976001	Ga1 2	43
	Ga2 2	44
	Ga3 2	45
	Ga4 2	46
	Ga5 2	47
S19977001	Ga5 2	47
S19981001	Ga5 4	47
S19982001	Ga5 4	47
S20118151	Z1 91	40
S20130009	P3 4-6	38
S20131009	P3 4-6-1	38
S20134001	P3 4-6-1-1	38
S20135001	P3 4-6-1-2	38
S20199001	M 9	30
	M 14	30
S20310001	A 13	2
S20311000	A 14	2
S20319001	A 27-3	2
S20320101	A 27-5	2
S20321001	A 27-6	2
S20323101	D 1-5	10
S20324101	A 33	2
S20325001	A 35	2
S20327101	A 27-8	2
S20338200	A 61	4
S20339000	A 62	4
S20340001	A 69	4
S20342001	A 70	4
S20344001	A 74	4
S20345001	A 10	2
	A 75	4
S20346000	A 80	4
S20353000	B 21	6

CODE	REF.NO	page
S20355002	K 9-6	26
S20356001	B 11	6
S20361001	B 17	6
S20362151	B 18	6
S20391001	C 7-4	8
S20392000	C 7-5	8
	M 25	30
S20398001	Ga1 3	43
	Ga2 3	44
	Ga3 3	45
	Ga5 3	47
S20400001	Ga4 3	46
	Ga5 3	47
S20402001	Ga1 3	43
	Ga3 3	45
S20412000	A 48	2
	A 55	2
	Z1 67	40
S20415101	C 21	8
S20416101	C 22	[illegible]
S20424001	Ga3 9	[illegible]
	Ga4 9	46
	Ga5 9	47
S20430001	Ga4 9	46
	Ga5 9	47
S20432001	Ga3 9	45
S20434001	Ga1 9	43
	Ga2 9	44
S20436001	Ga1 9	43
	Ga2 9	44
S20438101	Ga4 9	46
S20440101	Ga4 9	46
	Ga5 9	47
S20442001	Ga1 9	43
S20453001	D 1-1	10
S20460000	D 1-1-1	10
S20476001	F1 4	12
S20485001	F1 19	12
S20494001	F1 40	12
S20495001	F1 42	[illegible]
S20526000	G 47	[illegible]
S20530001	G 30	18
S20543101	G 51	18
S20544000	G 52	18
S20547001	G 55	18
S20548001	G 59	20
S20560001	G 66	20
S20571101	H 2	22
S20574001	H 8	22
S20575001	H 9-1	22
S20576001	H 9-2	22
S20577001	H 12	22
S20578101	H 13	22
S20579101	H 15-2	22
S20582001	Ga1 8	43
	Ga2 8	44
	Ga5 8	47
S20583001	Ga1 8	43
	Ga3 8	45
S20585001	H 27	22
S20598000	K 2	26
	L 3	28
S20601001	K 5	26

CODE	REF.NO	page
S20621001	L 4	28
S20625151	L 11	28
S20627001	L 14-1	28
S20655101	M 1	30
S20657001	M 4-1	30
S20668200	M 19	30
S20669000	M 23	30
S20671000	M 22	30
S20673001	N 11	32
S20676051	N 9	32
	P1 1-1-5	34
S20677000	N 10	32
S20678001	N 14	32
S20679001	N 15	32
S20681000	N 18	32
	P1 1-1-7	34
S20682101	N 19-2	32
S20682102	N 19-4	32
S20682103	N 19-1	32
S20682104	N 19-3	32
S20682105	P1 1-1-8	34
S20684101	N 23	32
S20685001	N 25	32
S20686001	N 26	32
S20687001	N 37	32
S20689001	N 48	32
S20690001	N 49	32
S20691001	N 50	32
S20692001	N 51	32
S20718000	Z1 27	40
S20721001	Z2 64-1	42
S20722001	Z2 64-10	42
S20769000	Z1 40	40
S20878000	A 82	4
S20880001	Ga4 4	46
S20881201	Ga4 2	46
S20896101	H 15-2	22
S20897101	Ga1 7	43
	Ga2 7	44
	Ga4 7	46
	Ga5 7	47
	H 15-2	22
S20898101	Ga1 7	43
	Ga3 7	45
	H 15-2	22
S20899001	Ga1 8	43
	Ga2 8	44
S21128001	N 44	32
S21129001	N 40	32
S21130051	N 42-1	32
S21132001	N 42-2	32
S21133001	N 28	32
S21134001	N 29	32
S21135001	N 31	32
S21136101	N 35	32
S21137001	N 33	32
S21294001	P1 1-1-1	34
S21295001	P1 1-1-2	34
S21297001	P1 1-1-12	34
S21298001	P1 1-1-15	34
S21299001	P1 1-1-17	34
S21300001	P1 1-1-19	34
S21301001	P1 1-1-23	34

CODE	REF.NO	page
S21302001	P1 1-1-24	34
S21303001	P1 1-1-26	34
S21304001	P1 1-1-28	34
S21305001	P1 1-1-3	34
S21306001	P1 1-1-13	34
S21307001	P1 1-1-14	34
S21310001	P1 2-1	34
S21311001	P1 2-2	34
S21312001	P1 2-3	34
S21314001	J 1-14	24
	P1 2-7	34
S21315001	J 1-10	24
	P1 2-9	34
S21316001	J 1-12	24
	P1 2-11	34
S21318000	P3 4-3	38
S21320001	J 1-7-1	24
S21321001	J 1-7-5	24
S21322001	J 1-7-6	24
S21324001	J 1-7-8	24
S21326001	J 1-24	24
S21335001	J 1-7	24
S21336101	E 1	10
S21341001	E 1-6	10
S21373101	P2 3-1-1	36
S21375001	P2 3-1-1-2	36
	P2 3-2-1-2	36
S21376001	P2 3-1-1-9	36
	P2 3-2-1-9	36
S21377001	P2 3-1-1-11	36
	P2 3-2-1-11	36
S21378001	P2 3-1-1-12	36
	P2 3-2-1-12	36
S21379001	P2 3-1-2	36
S21380101	P2 3-2-1	36
S21381001	P2 3-2-2	36
S21392001	Ga1 5	43
	Ga3 5	45
	Ga4 5	46
S21393001	Ga1 5	43
	Ga3 5	45
	Ga4 5	46
S21394001	Ga1 5	43
	Ga3 5	45
	Ga4 5	46
S21395001	Ga1 6	43
	Ga3 6	45
	Ga4 6	46
S21590000	P1 1-4	34
S23337001	A 7	2
	A 77	4
S23342001	C 1-2	8
	C 7-1	8
	H 1-3	22
	K 9-4	26
S23346101	K 1-2	26
	L 1-2	28
	L 1-2	28
S23349001	J 1-27	24
	P1 2-13	34
S23350001	A 63	4
S23351001	A 65	4
S23353001	Z1 58	40

CODE	REF.NO	page
S23356001	Z1 10	40
S23357001	A 79	4
S23360001	G 37	18
	G 42	18
S23364000	F1 44	12
S23418002	D 1-2	10
	N 27	32
	P1 1-5	34
S23452002	N 22	32
S23614101	L 12	28
S23616101	A 25-2	2
S23621101	G 70	20
	G 76	20
	G 78	20
	H 16-1	22
S23626001	K 7	26
	L 6	28
S23628101	G 69	20
S23651002	P1 1-1-18	34
	P3 4-9	38
S23773001	E 1-2	10
S23774001	J 1-15	24
	P1 2-8	34
S23775001	P1 1-1-6	34
S23777101	P1 1-1-4	34
S23779001	P1 1-6	34
S23896101	E 1-1	10
S23897001	E 1-4	10
S24663001	Ga1 4	43
	Ga3 4	45
	Ga4 4	46
S24664001	Ga1 4	43
	Ga3 4	45
	Ga4 4	46
S24680001	Ga2 4	44
	Ga2 5	44
	Ga4 5	46
S24681001	Ga2 4	44
	Ga2 5	44
	Ga4 5	46
S25005001	P1 1-1-9	34
S25006001	P1 1-1	34
S25007001	Ga5 5	47
	J 1-5	24
S25008001	Ga5 5	47
S25009001	Ga5 5	47
S25010001	Ga5 6	47
	J 1-6	24
S25019001	P3 4-8	38
S25190001	Ga1 4	43
	Ga3 4	45
S25191001	Ga1 4	43
	Ga3 4	45
S25192001	Ga1 4	43
	Ga4 4	46
S25193001	Ga1 4	43
	Ga2 4	44
	Ga3 4	45
	Ga5 4	47
S25527001	Ga1 4	43
	Ga3 4	45
S25528001	Ga2 4	44
	Ga4 4	46

CODE	REF.NO	page
S25529001	Ga2 4	44
	Ga4 4	46
S25538001	Ga2 2	44
	Ga5 2	47
	P3 5-2	38
S25543001	Ga1 2	43
	Ga3 2	45
S25544001	Ga1 2	43
	Ga1 2	43
	Ga3 2	45
	Ga3 2	45
S25546001	Ga2 2	44
	Ga5 2	47
S25547001	Ga2 2	44
	Ga5 2	47
S25818051	G 61	20
S27868001	B 16	6
S29700000	K 9-3	26
S29869001	Ga1 2	43
	Ga3 2	45
S29870001	F2 50-19-4	16
S29871001	Ga1 2	43
	Ga3 2	45
S29950001	Ga1 2	43
	Ga3 2	45
S29951001	Ga1 2	43
	Ga3 2	45
	Ga3 2	45
S29952001	Ga1 2	43
	Ga3 2	45
S30134001	P1 1	34
S30135101	P2 3-1	36
S30135102	P2 3-2	36
S30291001	P3 5	38
S30292001	P3 5	38
S30303001	P3 4	38
S30562000	F1 28	12
	G 18	18
S30894101	Ga2 6	44
	Ga4 6	46
S30898001	Ga4 2	46
S30900001	Ga4 2	46
S30901001	F2 50-25-3	16
S30902001	F2 50-25-4	16
S30903001	F2 50-25-5	16
S30904001	F2 50-25-6	16
S30905001	F2 50-25-7	16
S33529001	Ga5 4	47
S33530001	Ga5 5	47
S33531001	Ga5 5	47
S33536001	Ga5 6	47
S35635020	Z2 42-2-3	42
S35826021	Z2 42-2-4-2	42
	Z2 42-2-4-3	42
	Z2 42-3-1-3	42
	Z2 42-3-2-2	42
	Z2 42-4-3	42
	Z2 42-6-1-3	42
S35828021	Z2 42-2-4	42
S35831021	Z2 42-3-1-2	42
	Z2 42-6-1-2	42
S35832021	Z2 42-3-2-1	42
S35997001	Z1 29	40

CODE	REF.NO	page
S35997001	Z2 64-3	42
S36007001	Z2 64-4	42
S36062021	Z2 42-2-2	42
S36064021	Z2 42-1-2	42
S37070121	F1 34	12
S38301020	A 44	2
S38302020	Z1 65	40
S38304001	A 29	2
S38308121	F1 5	12
S38311100	G 43	18
S38312050	G 24	18
S38328051	N 1	32
S38330050	N 46	32
S39562001	A 37	2
S39564021	A 23	2
S39565101	B 24	6
S39566001	C 7	8
S39571021	C 10	8
S39574001	C 8	8
S39575001	F1 2	12
S39577000	F1 2-1	12
S39578001	G 1	18
S39585001	G 1-3	18
S39586001	G 1-4	18
S39589021	G 8	18
S39593021	G 54	18
S39596021	G 54-1	18
S39597001	M 4	30
S39598000	M 4-4	30
S39599001	M 4-3	30
S39601000	M 4-5	30
S39602000	M 4-7	30
S39603001	M 4-8	30
S39605001	A 2	2
S39606020	A 5	2
S39607001	A 8	2
S39608021	A 11	2
S39611001	A 27	2
S39612001	A 27-1	2
S39613001	A 27-2	2
S39618001	J 1-1	24
S39623001	A 38	2
S39624021	A 42	2
S39625151	A 49	2
S39626021	A 58	4
S39629021	B 3	6
S39630000	B 10	6
S39631000	B 20	6
S39644021	C 2	8
S39645021	C 3	8
S39646021	C 4	8
S39647000	C 5	8
S39648021	C 9	8
S39649021	C 15	8
S39650051	C 17	8
S39651051	J 1-2	24
S39652021	C 18	8
S39653051	C 23	8
S39658001	F1 1	12
S39659021	F1 6	12
S39660001	F1 7	12
S39661001	F1 8	12
S39662001	F1 9	12

CODE	REF.NO	page
S39663121	F1 11	12
S39664101	F1 12	12
S39665001	F1 15	12
S39666001	F1 20	12
S39667021	F1 21	12
S39669101	F1 23	12
S39670000	F1 24	12
S39671121	F1 26	12
S39672001	F1 29	12
S39673020	G 5	18
S39674001	G 9	18
S39675001	G 10	18
S39676121	G 15	18
S39677021	G 16	18
	H 5	22
	K 4	26
	L 9	28
S39678021	G 17	18
S39679001	G 20	18
S39683000	G 26	18
S39684021	G 27	1
S39685001	G 28	[illegible]
S39686000	G 44	18
S39687000	G 45	18
S39688001	G 46	18
S39690021	G 36	18
	G 41	18
S39691001	G 39	18
S39692021	G 50	18
S39693001	G 58	20
S39694021	G 64	20
S39695001	G 65	20
S39704021	H 4	22
S39706001	H 17	22
S39707001	H 19	22
S39708001	H 25	22
S39709021	H 28	22
S39728021	K 3	26
	L 8	28
S39743001	M 3	30
S39744021	M 7	[illegible]
	M 12	30
S39745001	M 8	30
S39747001	M 10	30
S39749001	M 13	30
S39751021	M 11	30
S39752021	M 15	30
S39767021	J 1-26	24
S39768001	J 1-23	24
S39769051	G 40	18
S39770001	F1 17	12
S39773001	G 35	18
S39775001	B 24	6
S39784001	A 92	4
S39795001	P1 2-6	34
S39796001	J 1-22	24
	P1 2-15	34
S39797001	J 1-16	24
S39798001	J 1-17	24
S39799001	J 1-18	24
S39800001	J 1-21	24
S40866001	L 14-2	28
S42042021	G 33	18

CODE	REF.NO	page
S43521000	M 29-1	30
S43522000	M 29-2	30
S43523000	M 29	30
S43524001	D 1	10
S43527001	H 6	22
	K 6	26
S43530001	P1 2	34
S43563001	J 1	24
S43563002	J 1	24
S43916001	G 48-1	18
S44535001	A 22-2	2
	A 25-3	2
S44536000	A 24	2
S44778000	A 19	2
S44779001	A 21	2
S44955001	G 25-1	18
S45952001	Z2 42	42
S45955001	Z2 42-1	42
S45956001	Z2 42-2	42
S45960001	Z2 42-6	42
S45961001	Z2 42-6-3	42
S45967001	Z2 42-6-1	42
S45968001	Z2 42-3	42
S45969001	Z2 42-3-1	42
S45970001	Z2 42-3-2	42
S45971001	Z2 42-4	42
S45972001	Z2 42-5	42
S46899001	C 7-2	8
	K 9-2-1	26
S46900001	B 13	6
S46903001	F1 30	12
S46904001	L 5	28
S46907001	Z1 11	40
S49054001	Ga3 9	45
S49337000	M 21	30
S50091001	G 23	18
S52053001	K 9	26
S52054001	K 9-1	26
	K 9-1	26
S52059001	K 9-5	26
S52060001	K 9-2	26
S52062001	K 9	26
S52063001	K 9-2	26
S54001001	B 1	6
S54002001	B 1	6
S54006001	C 1	8
S54007001	C 1	8
S54008001	H 1	22
S54015001	K 1	26
S54016001	L 1	28
S54017001	L 1	28
S55666002	Z1 19	40

CODE	REF.NO	page

CODE	REF.NO	page

brother®

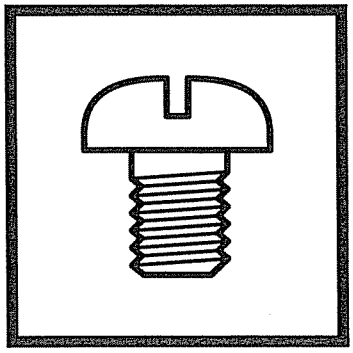

パーツブック
PARTS BOOK

ブラザー工業株式会社
〒467-8561 名古屋市瑞穂区苗代町 15 番 1 号　TEL (052) 824-2392

BROTHER INDUSTRIES, LTD
15-1, Naeshiro-cho, Mizuho-ku, Nagoya 467-8561, Japan. Phone : 81-52-824-2177

Printed in Japan

878-N21
S95N21-201
2002.02. (C)